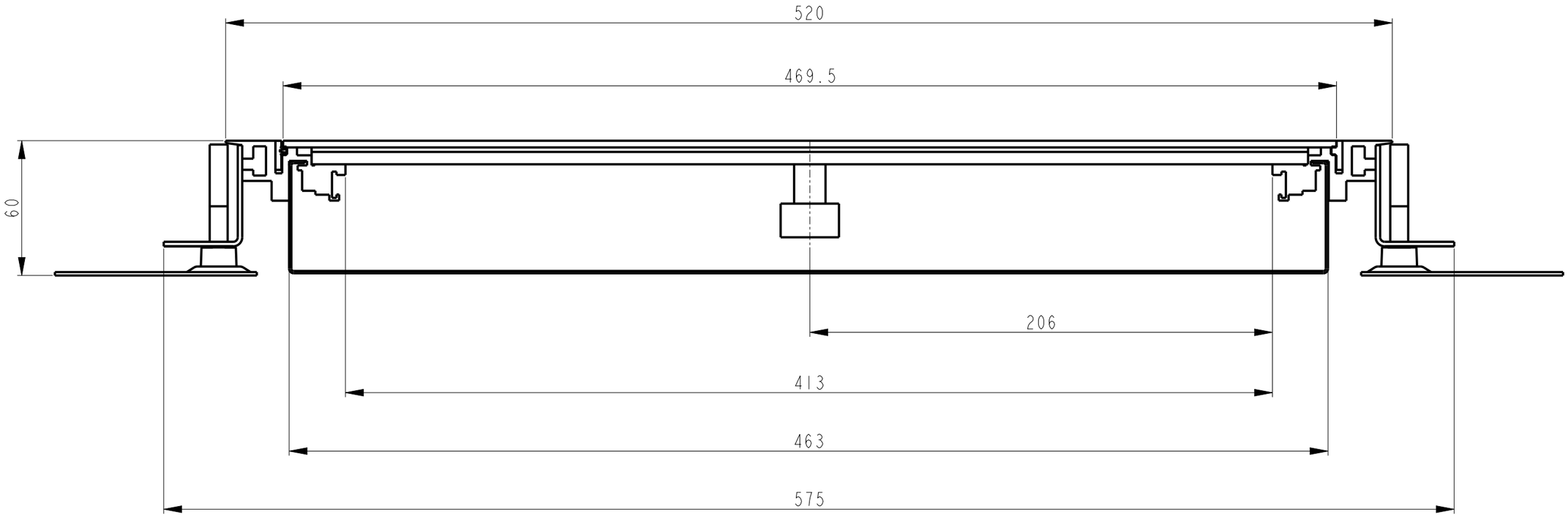

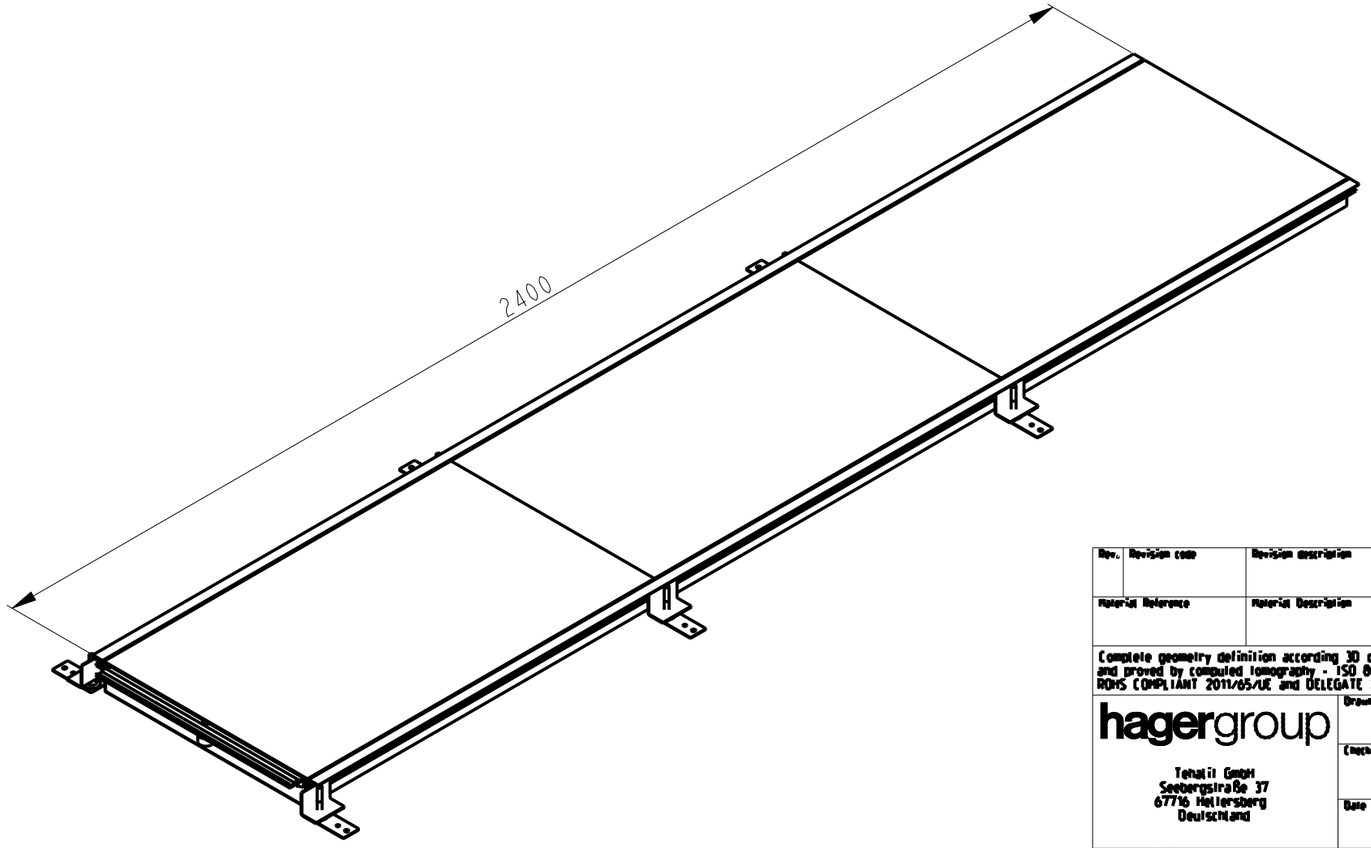

Rev.	Revision code	Revision description		Revision Drawn	Revision Checked	Revision Date

Material Reference	Material Description	Treatment	Weight (g)	Surface (mm²)	Volume (mm³)
			1.01	1.01	1.01

Complete geometry definition according 3D data file and proved by computed tomography - ISO 8015 COMPLIANT
ROHS COMPLIANT 2011/65/UE and DELEGATE 2015/863/EU

General Geometric Tolerance

General Linear / Angular Tolerance

DesignOwner/0200500

hagergroup

Tehalit GmbH
Seebergstraße 37
67716 Heltersberg
Deutschland

Drawn	Project Number	Description
Checked	Lifecycle State	
Date	Scale: 1:2 / Size: A3 / Sheet: 1/1	Drawing Code: BKWD500060 — Rev.

v9a0057.0).e

This drawing is property of hager group. It is not reproduced and communicated without his authorization