75

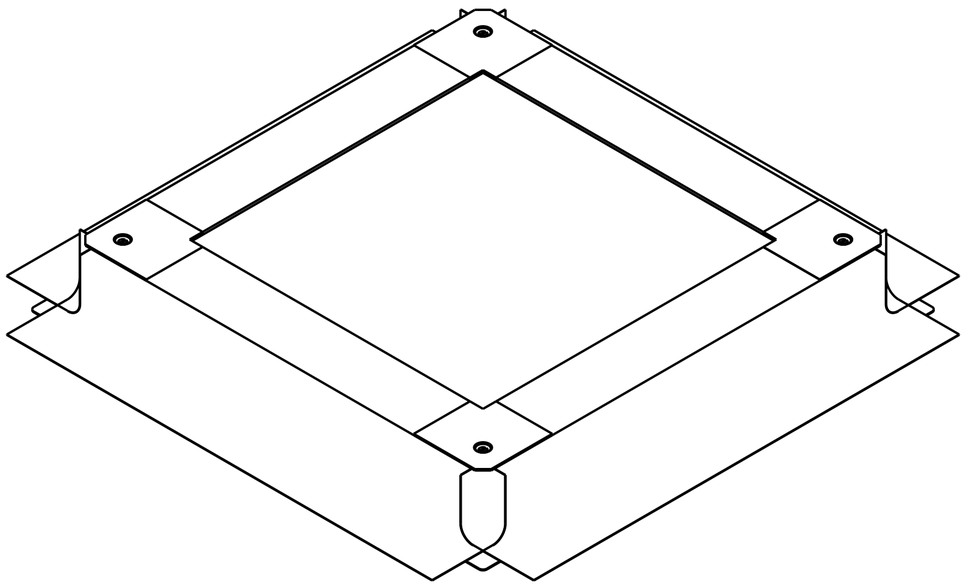

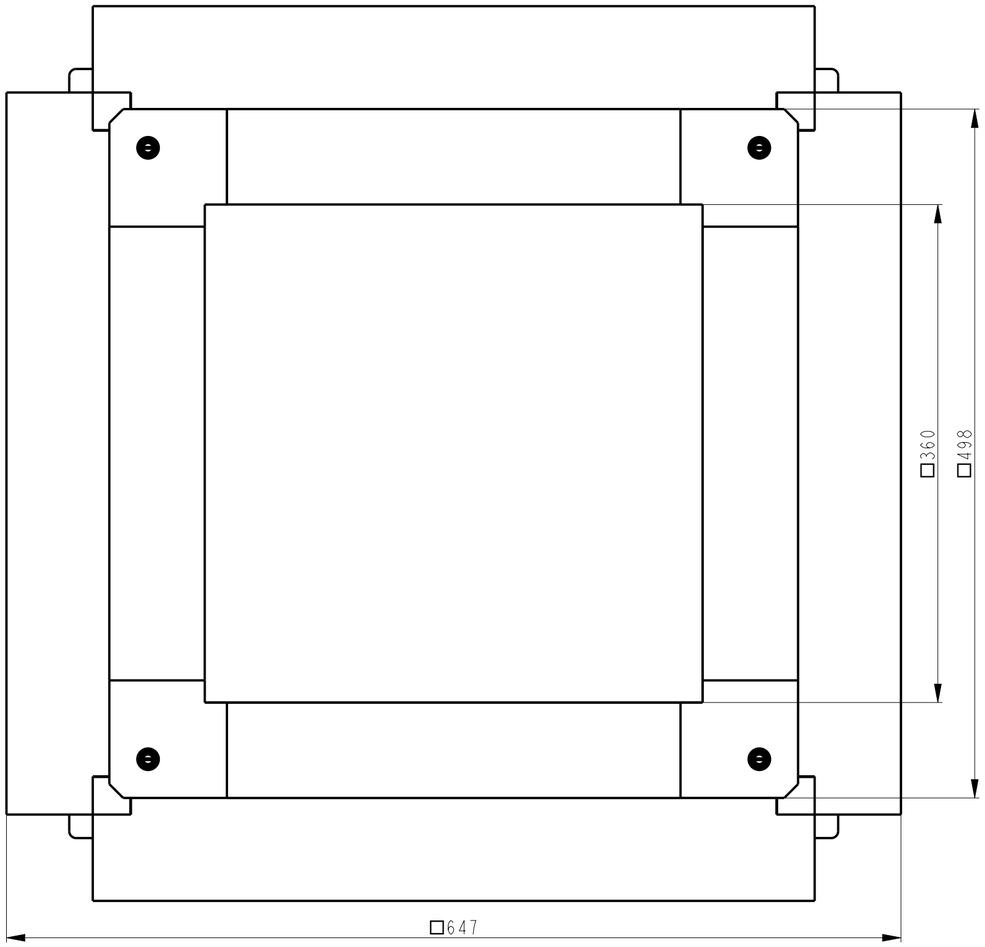
□360
□498
□647