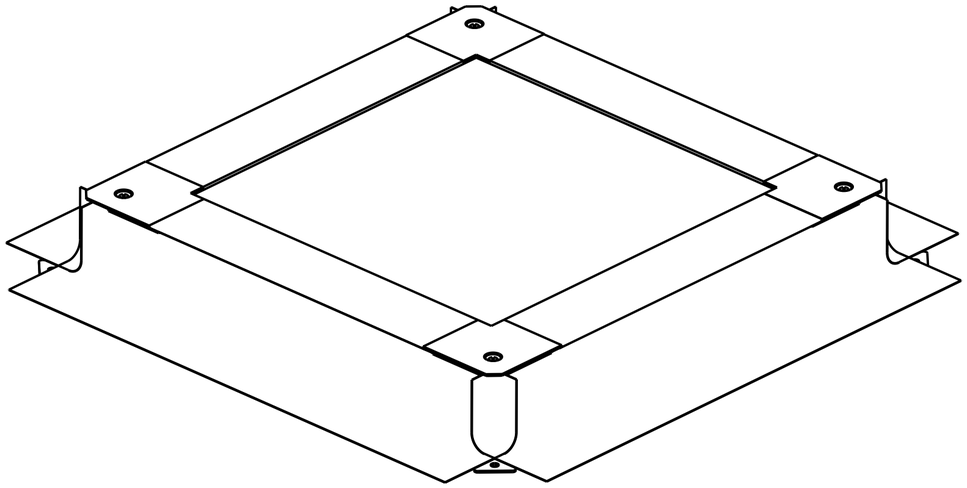

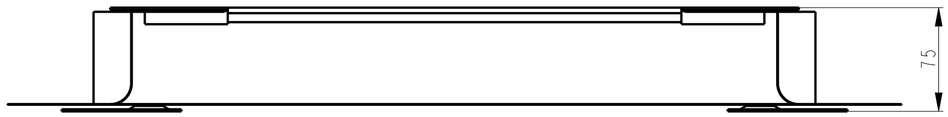
75

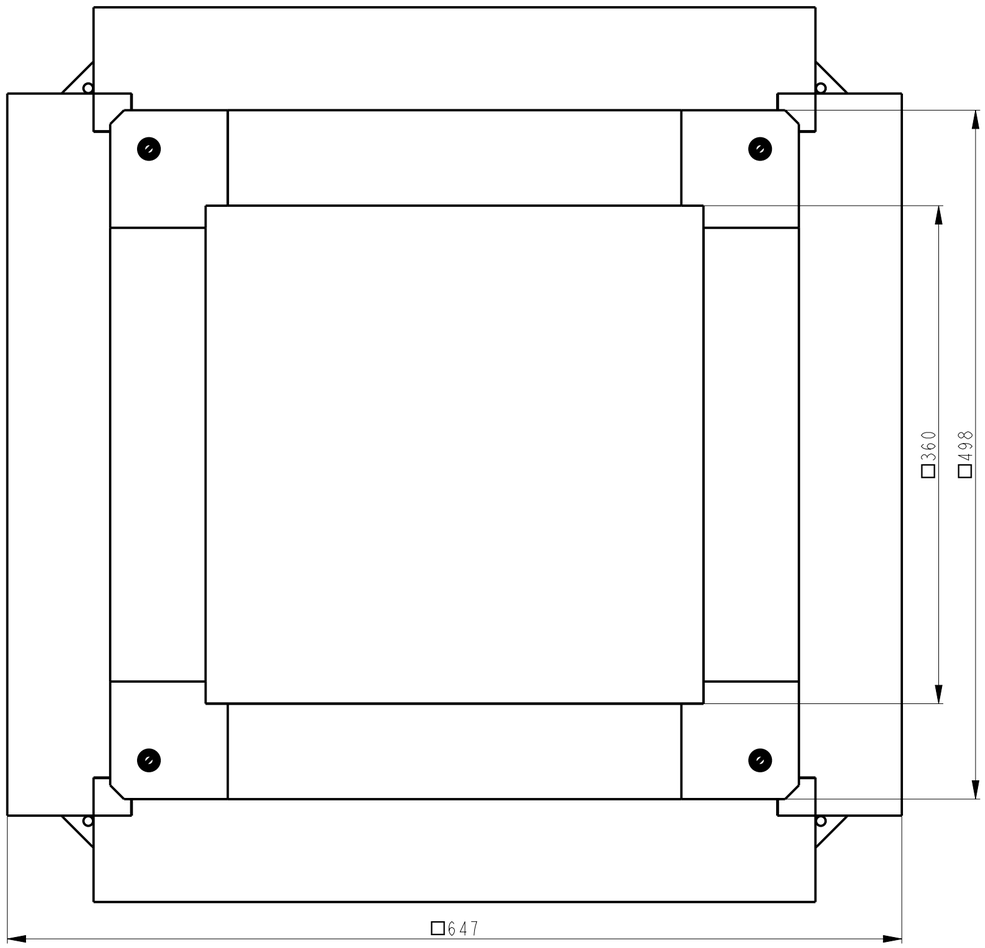
□360
□498
□647