User manual

hw+ / h3+

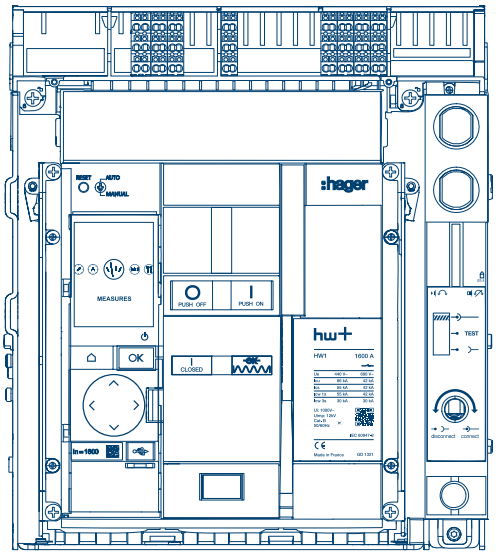

Air circuit breakers / Electrically-operated circuit breakers

HW1 / PW1600

CE

hager

EN

1 About this document....3

1.1 Safety instructions....3
1.2 Use of this document....5

2 Circuit breaker operation....6

2.1 Description....6
2.2 Closing of the circuit breaker....10
2.3 Opening of the circuit breaker....12
2.4 Locking the opening and closing push buttons....13
2.5 Locking the circuit breaker using padlocks....15
2.6 Locking the circuit breaker using key locks....18
2.7 Locking the chassis using padlocks....22
2.8 Locking the chassis using keylocks....25
2.9 RI open door racking interlock....29
2.10 Mechanical interlock....31

3 Positions of the drawout circuit breaker in the chassis....33

4 Operation of the drawout circuit breaker in the chassis....34

4.1 Moving from the Connected position to the Test position....35
4.2 Moving from the Test position to the Disconnected position....37
4.3 Moving from the Disconnected position to the Test position....39
4.4 Moving from the Test position to the Connected position....40

5 Removing the drawout circuit breaker....42

6 Inserting the drawout circuit breaker....44

7 Closing the circuit breaker after a trip operation....47

1 About this document

1.1 Safety instructions

Warnings and instructions

This documentation contains safety advice which must be respected for your own safety and to prevent property damage.
Safety instructions relating to your own safety are identified by a safety warning symbol in the documentation.
Safety instructions referring to material damage are indicated by the mention “**Notice**”.
The safety alert symbols and the statements below are classified according to the degree of risk.



Danger

DANGER indicates a situation of imminent danger which, unless averted, will result in death or serious injuries.



Warning

Warning indicates a potentially dangerous situation which, unless averted, may result in serious injuries or even death.



Caution

Caution indicates a potentially dangerous situation which, unless averted, may result in minor or moderate injuries.



Notice

Notice indicates a warning message about possible mechanical or electrical damage.



Information

Information also indicates important instructions for use and particularly relevant information regarding the product, which must be respected to ensure effective and safe use.

Qualified personnel

The product or the system described in this documentation must be installed, operated and maintained by qualified personnel only. Hager Electro accepts no responsibility regarding the consequences of this equipment being used by unqualified personnel. Qualified personnel are those people who have the necessary skills and knowledge for building, operating and installing electrical equipment, and who have received training enabling them to identify and avoid the risks incurred.

Appropriate use of Hager products

Hager products are designed to be used only for the applications described in the catalogues and in the technical documentation relating to them. If products and components from other manufacturers are used, they must be recommended or approved by Hager.

Appropriate use of Hager products during transport, storage, installation, assembly, commissioning, operation and maintenance is required to guarantee problem-free operation in complete safety.

The permissible ambient conditions must be respected. The information contained in the technical documentation must be respected.

Publication liability

The contents of this documentation have been reviewed in order to ensure that the information is correct at the time of publication.

Hager cannot, however, guarantee the accuracy of all the information contained in this documentation. Hager assumes no responsibility for printing errors and any damage they may cause.

Hager reserves the right to make the necessary corrections and modifications to subsequent versions.

1.2 Use of this document

Purpose of the document

This manual is intended to provide users, electricians, panel builders and maintenance staff with the technical information required to operate HW1 air circuit breakers and PW1600 electrically-operated circuit breakers.

Field of application

This document is applicable to HW1 circuit breakers of the hw+ range and PW1600 electrically-operated circuit breakers of the h3+ range.

Revisions

Version	Date
6LE007331Ae	2026-11

Documents to consult

Document	Reference
User Manual for hw+ / h3+ sentinel electronic trip units	6LE009420A
User Manual for sentinel energy electronic trip units hw+ / h3+	6LE009417A
Installation manual for HW1 air circuit breakers	6LE007893A
Installation manual for PW1600 electrically-operated circuit breakers	6LE090957A
sentinel Energy Modbus communication guide	6LE007964A
HTD210H panel display user guide	6LE002999A
Cybersecurity guide	6LE009346A
HW1 user maintenance guide	6LE007897A
HW1 / HW2 / HW4 / HW6 troubleshooting guide	6LE009769A

You can download these publications and other technical information from our website:
www.hager.com

Contact

Address	Hager Electro SAS - BP3 - 67215 OBERNAI CEDEX - FRANCE - www.hager.com
Phone	+ 33 (0)3 88 49 50 50
Website	www.hager.com

2 Circuit breaker operation

2.1 Description

The circuit breakers are equipped with the following components on the front.

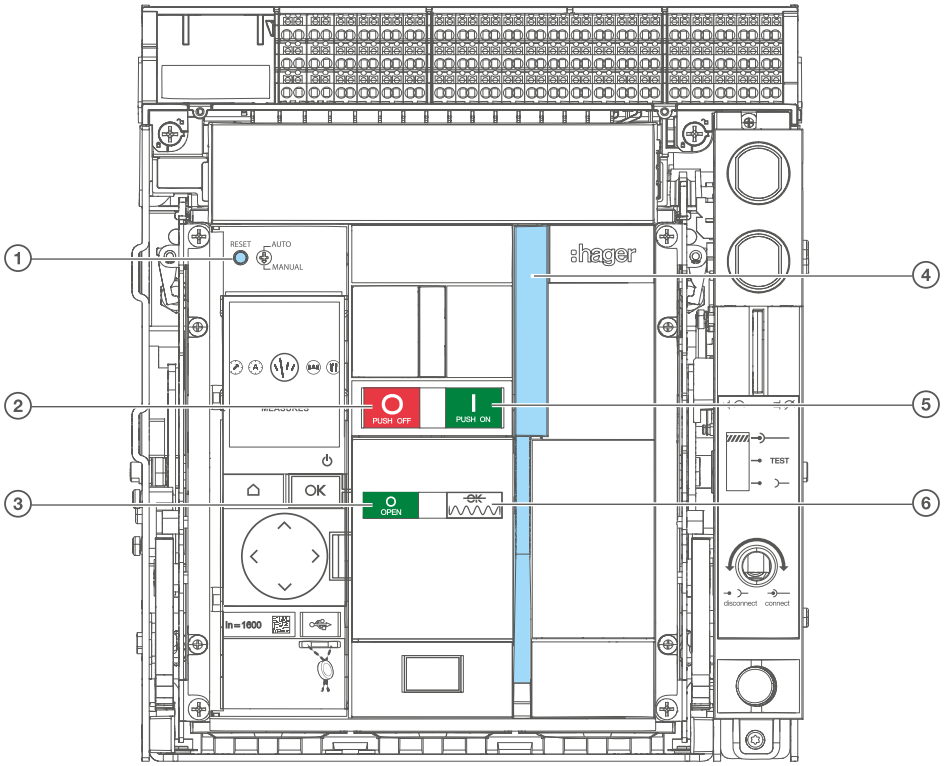

1. RESET re-arm button
2. Opening push button
3. Contact opening and closing indicator
4. Charging handle
5. Closing push button
6. Closing spring status indicator

Status indicators

The combination of the two indicators shows the status of the circuit breaker.

Opening and closing indicator	Closing spring status indicator	Circuit breaker status
	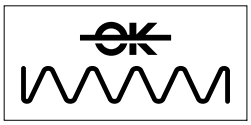	Circuit breaker open. Closing spring discharged.
		Circuit breaker open. Closing spring charged but not ready to close because: – Following a trip event, the circuit breaker has not been reset.(see Chapter 7, "Closing the circuit breaker after a trip operation"). – The circuit breaker is mechanically locked in the open position using a lock or padlock.
		Circuit breaker open. Closing spring charged. The circuit breaker is ready to be closed.
	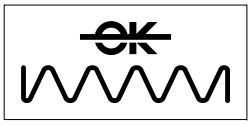	Circuit breaker closed. Closing spring discharged.
		Circuit breaker closed. Closing spring charged.

RESET re-arm button

The RESET button is used to reset the circuit breaker following tripping (see Chapter 7, "Closing the circuit breaker after a trip operation").

The operation of the RESET re-arm button depends on the Auto or Manual mode set using the dial on the right.

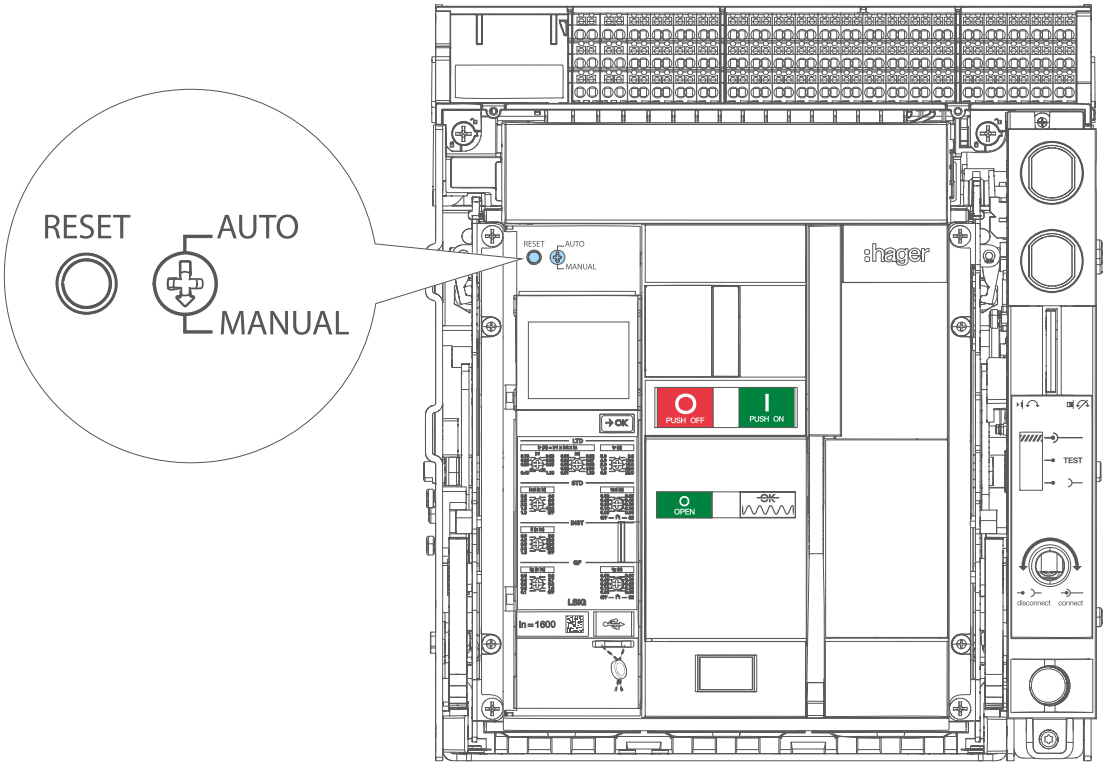

- **Auto mode**, in which it is not necessary to press the RESET re-arm button before closing the circuit breaker again after tripping.
  This mode is usually used if the circuit breaker is remotely monitored, as it can be closed without requiring on-site intervention.
- **Manual mode**, in which the RESET re-arm button must be pressed before closing the circuit breaker again after tripping.

Notice

Risk of mechanical damage.

To switch from Auto to Manual mode, always turn the dial **anti-clockwise**.

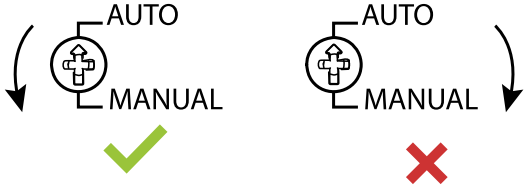

To switch from Manual to Auto mode, always turn the dial **clockwise**.

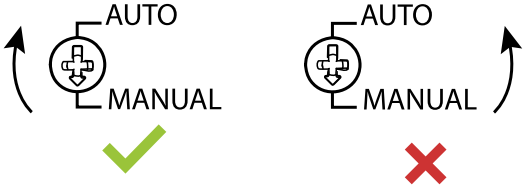

Closing spring

The closing spring is used to mechanically close the circuit breaker. It must be charged first. To do so, and two procedures are available:

- **Manual charging**
  Charge the closing spring using the charging handle until the status of the indicator changes.

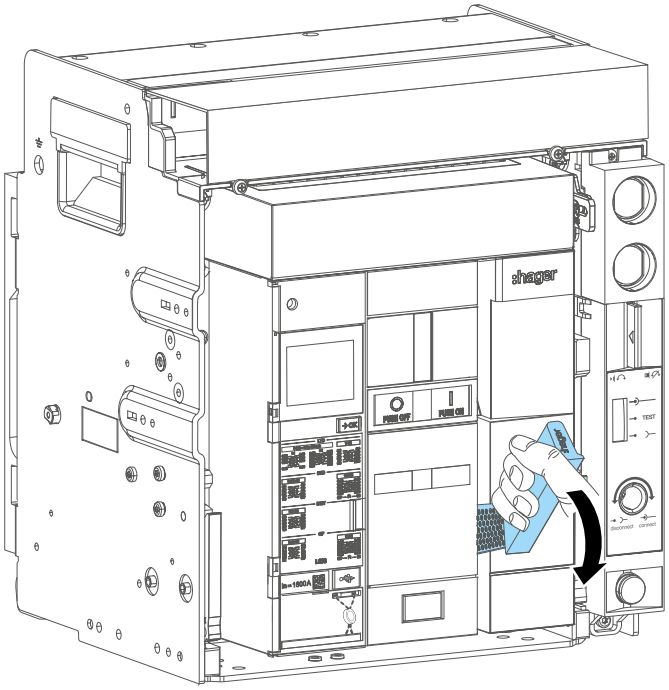

- **Automatic charging**
  If an MO charging motor is installed and powered, the closing spring charges automatically each time the circuit breaker is closed.

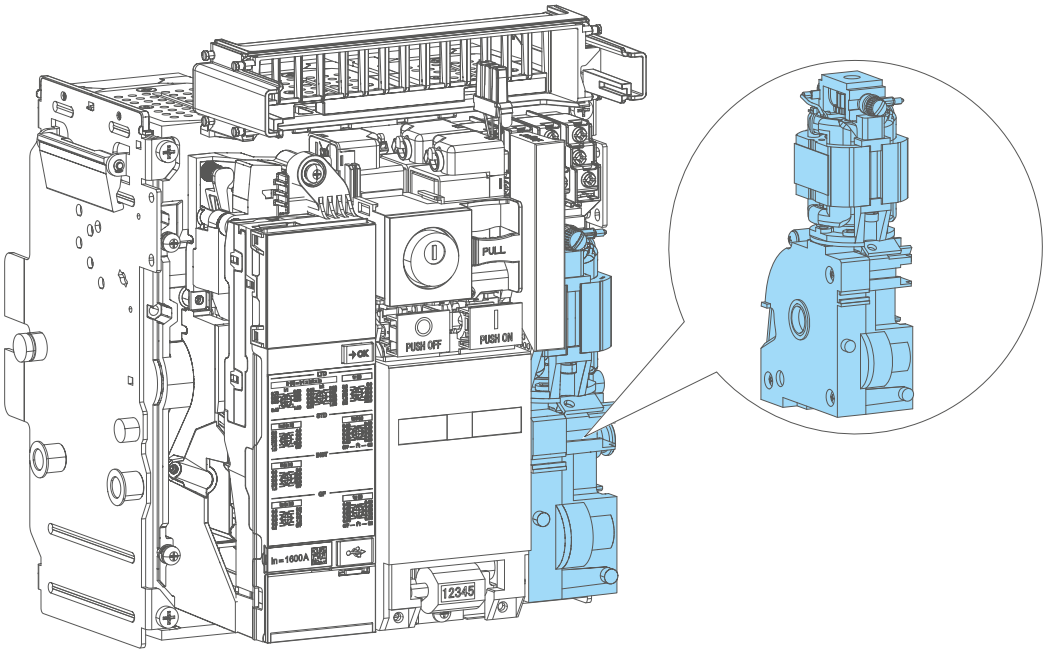

2.2 Closing of the circuit breaker

Danger

Risk of electric shock, explosion or arc flash.
Inspect the electrical installation and eliminate the cause of the trip before closing the circuit breaker.
Never close a circuit breaker locally or remotely without first ensuring that the installation complies with safety standards.

To close the circuit breaker:

	Action	Illustration
1	Check that the circuit breaker is open, the closing spring is discharged or charged if a charging motor is installed.	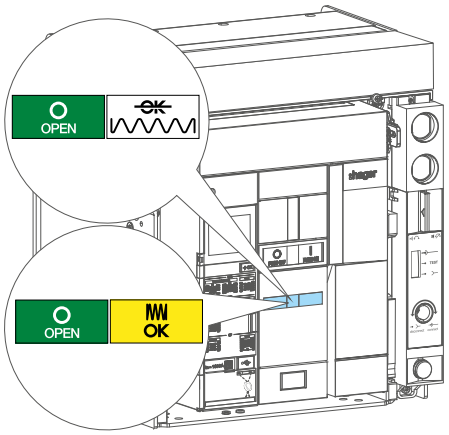
2	If necessary, charge the closing spring using the charging handle until the following indicators appear.	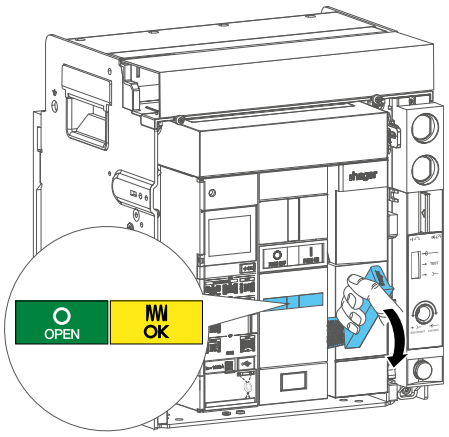

	Action	Illustration
3	Close the circuit breaker by pressing the closing push button I. Verify that the indicators change status and signal that the circuit breaker is closed (CLOSED) and the closing spring discharged.	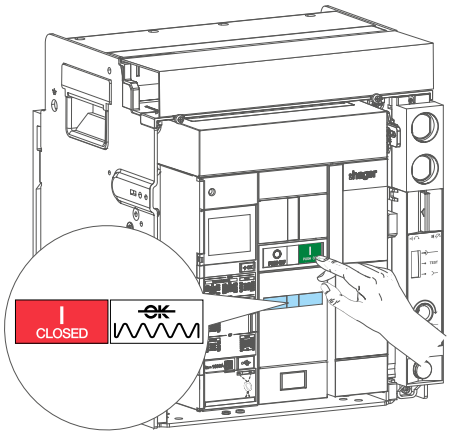
4	If a charging motor is installed and powered, the closing spring charges automatically.	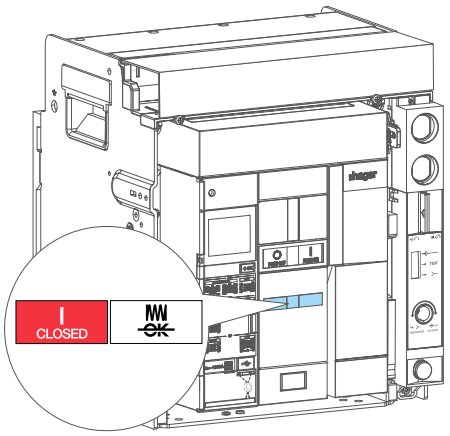

2.3 Opening of the circuit breaker

To open the circuit breaker:

	Action	Illustration
1	Check that the circuit breaker is open, the closing spring is discharged or charged if a charging motor is installed.	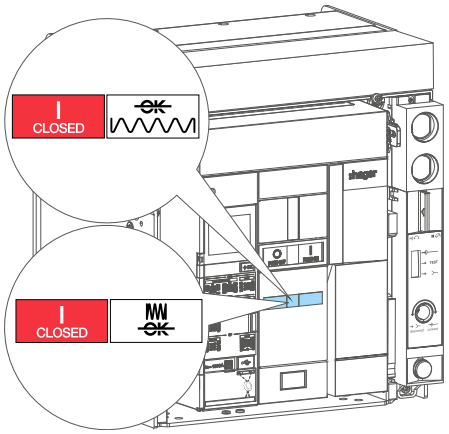
2	Open the circuit breaker by pressing the opening push button .	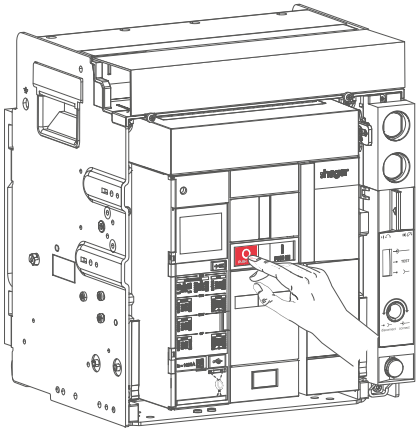
3	Verify that the indicators change status and signal that the circuit breaker is open (OPEN) and: – If the circuit breaker is not equipped **with an MO spring charging motor,** that **the closing spring is discharged**. – If the circuit breaker is equipped **with an MO spring charging motor,** that **the closing spring is charged.**	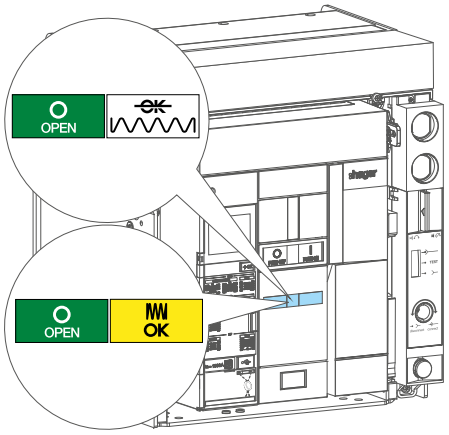

2.4 Locking the opening and closing push buttons

The closing PUSH ON and opening PUSH OFF push buttons can be locked against any operation using the PBC push button covers. It prevents any unintended or unauthorised operation.

The transparent PBC push button covers have an additional function. They can be disengaged and turned so that the opening push button PUSH OFF remains permanently and mechanically engaged. This locking function is also guaranteed if the circuit breaker is activated remotely by a CC closing coil. Even if the CC closing coil is activated, the main contacts remain open.

This prevents any unintentional or unauthorised operations.

The push buttons can be locked independently or jointly and up to 3 Ø 6 mm padlocks can be fitted.

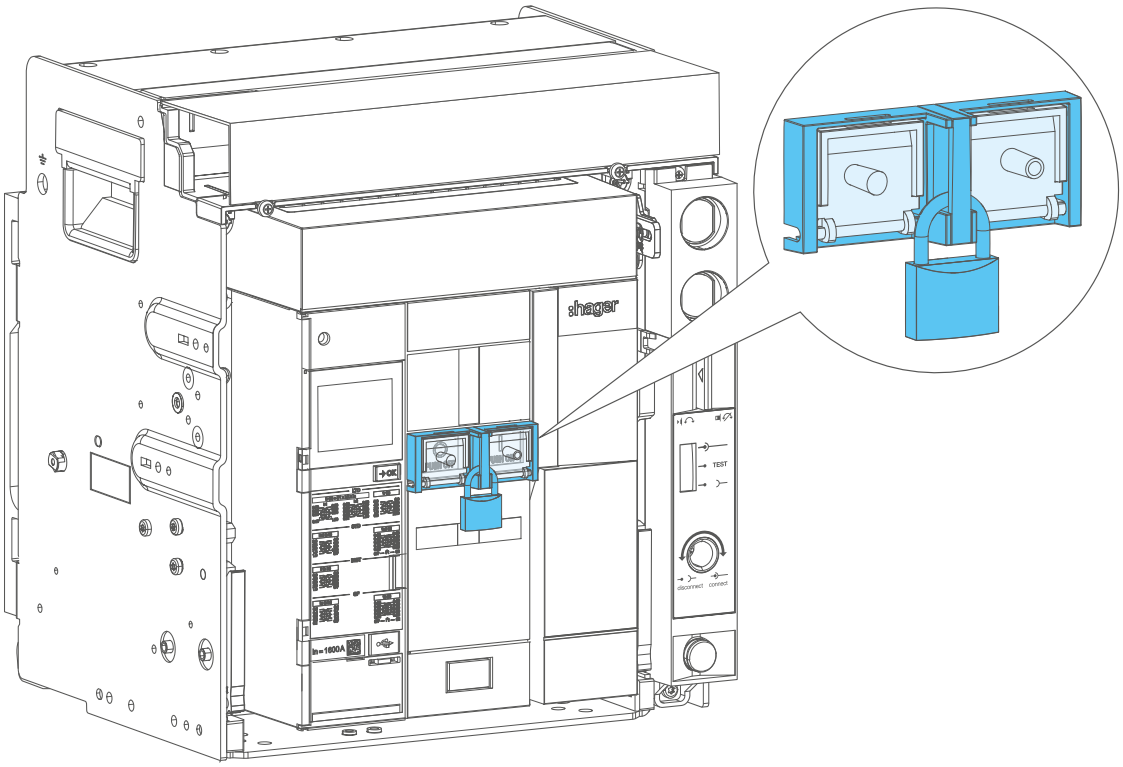

To activate the locking device:

	Action	Illustration
1	Fold down the PBC push buttons according to the position you want to lock. **Case 1** The opening push button is pressed continuously and the closing push button is blocked. **Case 2** The opening and closing push buttons are blocked.	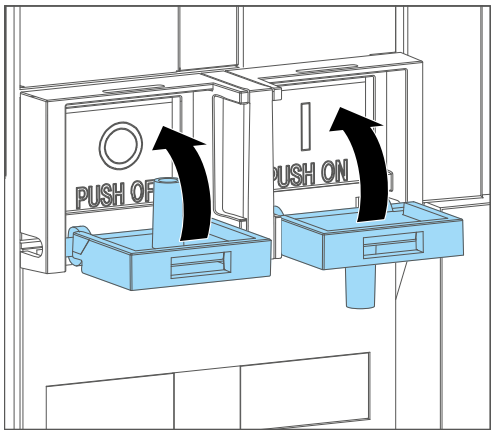 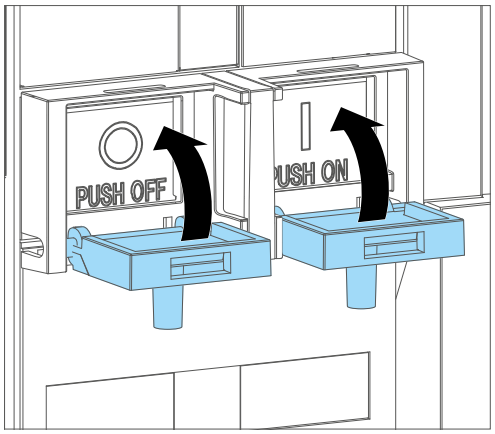
2	Lock it using one or more padlocks.	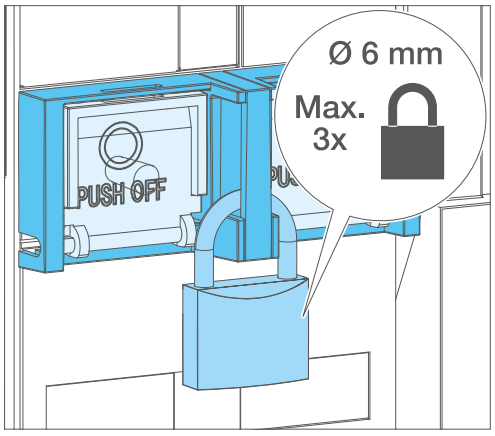

Information

- It is not possible to hold down the closing push button with this accessory.
- Refer to the instruction manual to install the locking accessory 6LE007490A.

2.5 Locking the circuit breaker using padlocks

The locking device prevents the circuit breaker from closing using padlocks.
Up to 3 Ø 5-8 mm padlocks can be installed.

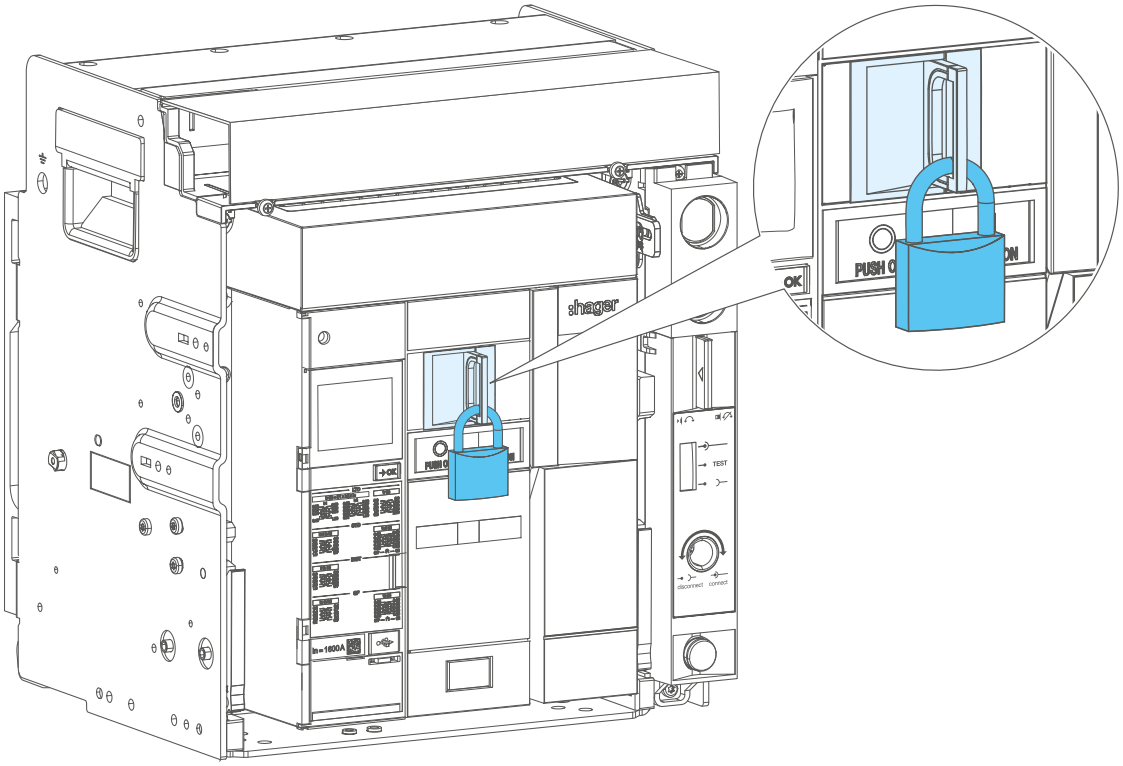

To activate or deactivate the locking device:

	Action	Illustration
1	Press the opening push button, the circuit breaker opens and, while holding down the push button, pull the tab of the locking device.	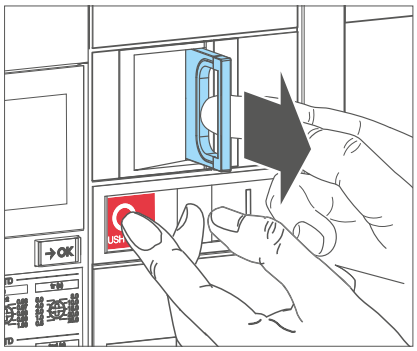
2	Release the opening push button while keeping the tab pressed. The opening push button remains pressed. Position and close the padlock.	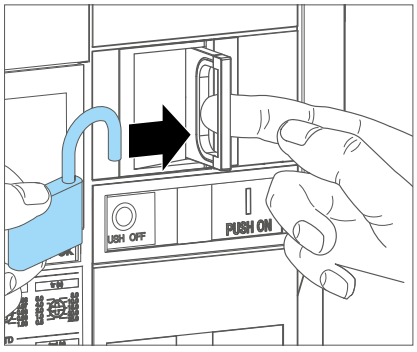

	Action	Illustration
		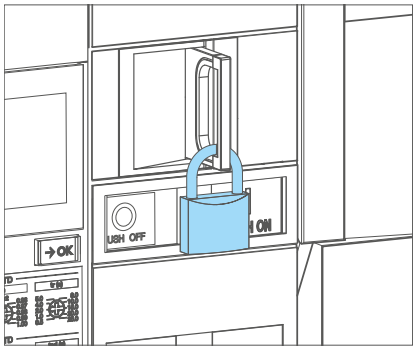
3	If necessary, charge the closing spring using the charging handle until the following indicators appear.	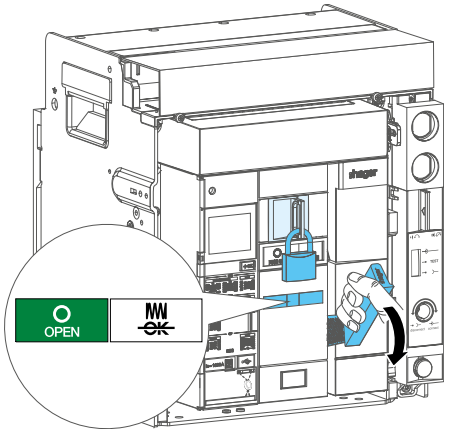
4	Check that it is no longer possible to close the circuit breaker by pressing the closing push button I.	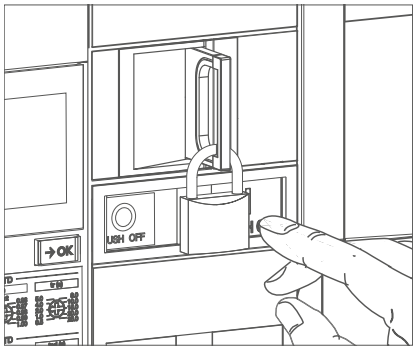
5	To unlock the device, remove the padlock.	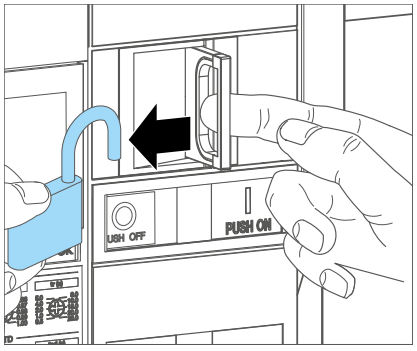

	Action	Illustration
6	The tab and the opening push button return to their initial position.	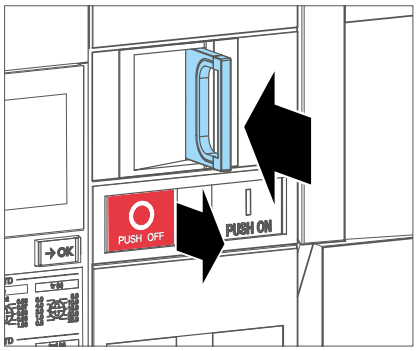
7	Check that it is now possible to close the circuit breaker by pressing the closing push button .	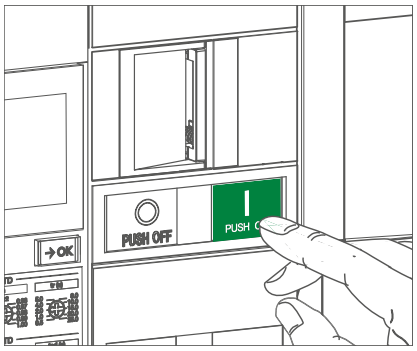

Information

Refer to the instruction manual to install the locking accessory 6LE007694A.

2.6 Locking the circuit breaker using key locks

This locking device prevents the circuit breaker from closing using a key lock. Several types of locks can be installed.

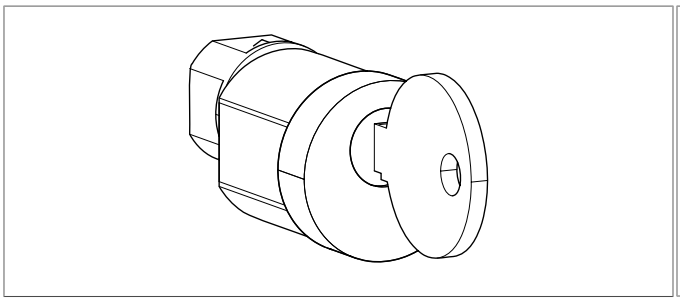

Ronis type lock

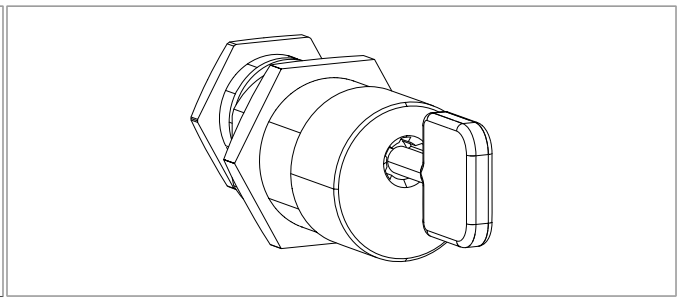

Profalux type lock (not provided in our offer)

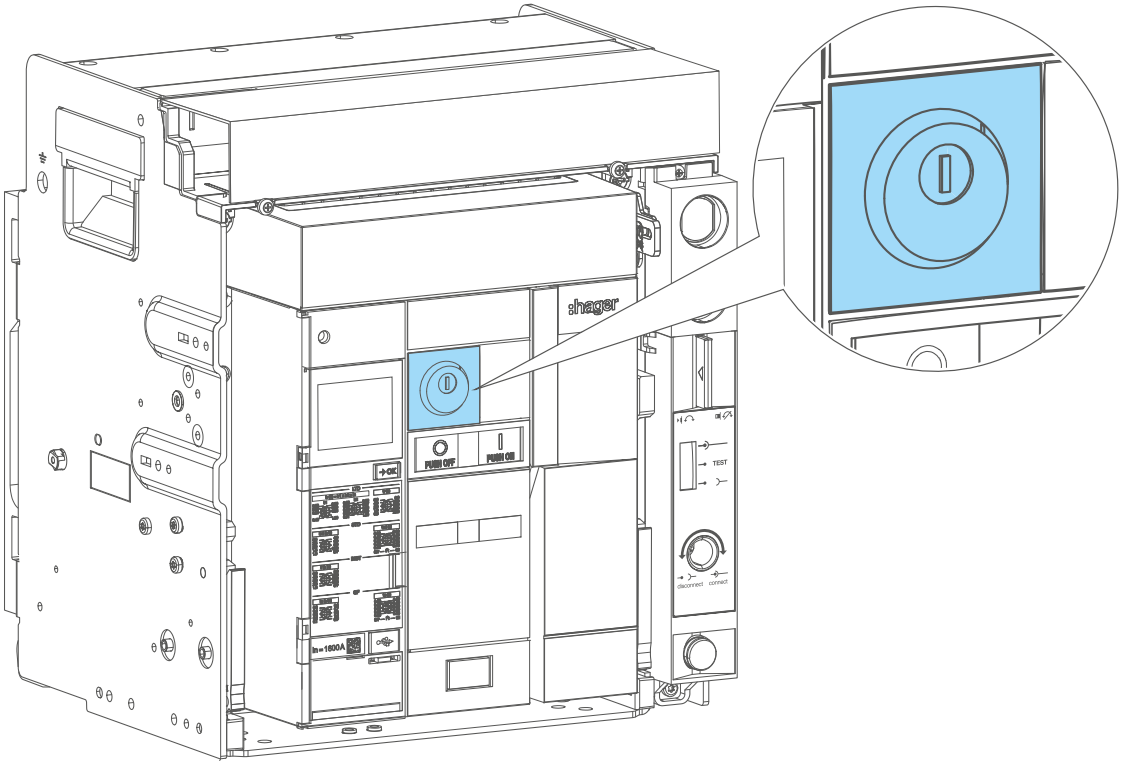

To activate or deactivate the locking device:

	Action	Illustration
1	Check that the key is in the horizontal position.	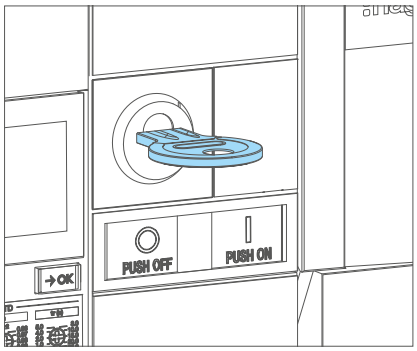
2	Open the circuit breaker by pressing the opening push button .	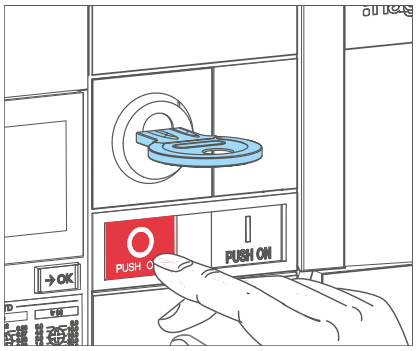
3	While pressing down the opening push button , put the key back into the vertical position by turning it counter-clockwise.	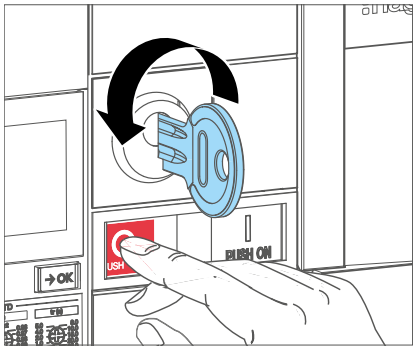
4	Remove the key.	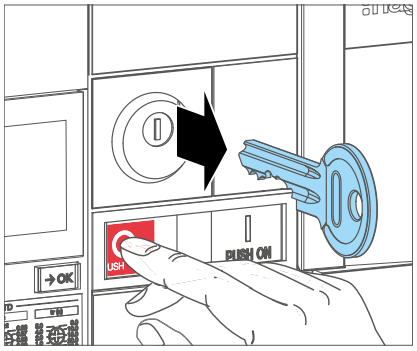

	Action	Illustration
5	Then release the opening push button . It remains pressed in.	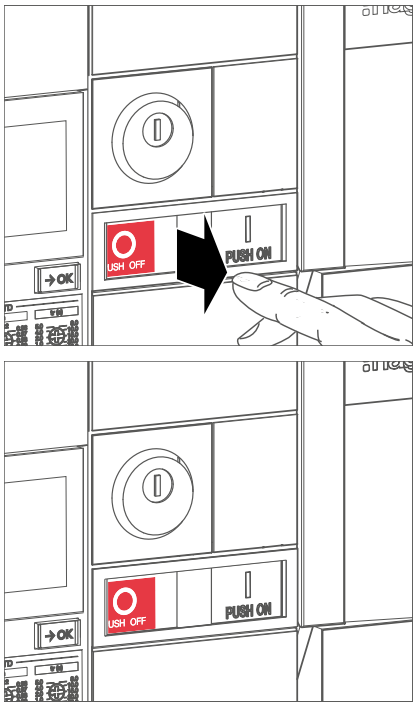
6	If necessary, charge the closing spring using the charging handle until the following indicators appear.	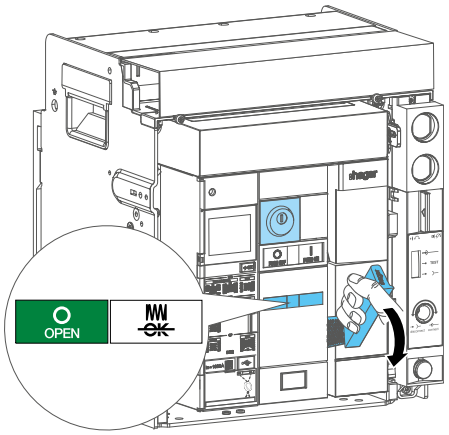
7	Check that it is no longer possible to close the circuit breaker by pressing the closing push button .	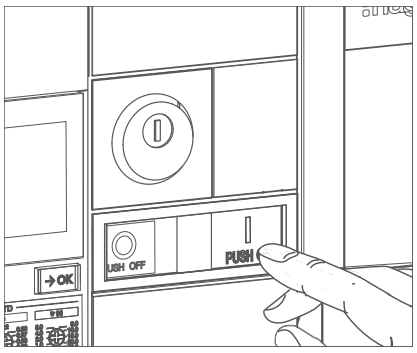

	Action	Illustration
8	To unlock the device, insert the key into the lock.	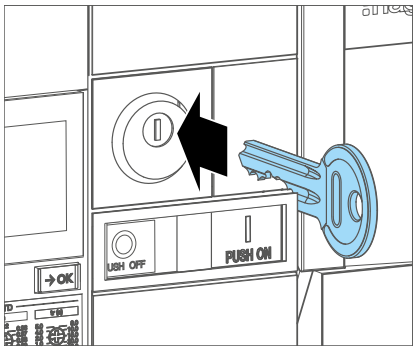
9	Turn the key clockwise.The opening push button returns to its initial position.	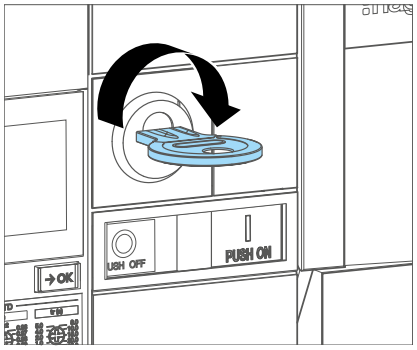 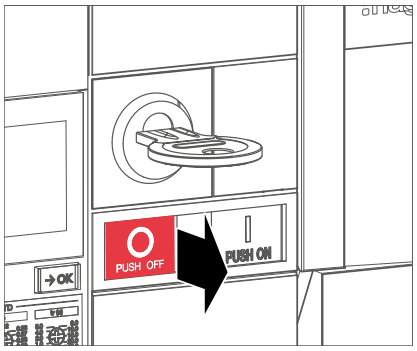
10	Check that it is now possible to close the circuit breaker by pressing the closing push button .	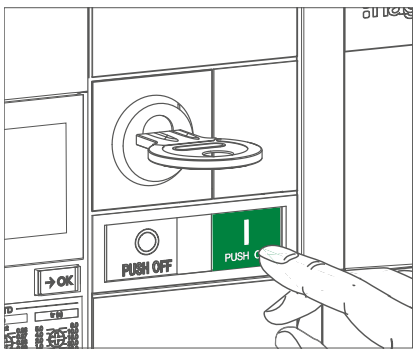

Information

- The key remains locked in the lock. To remove it, follow steps 1 to 4.
- Refer to the instruction manual to install the locking accessory 6LE007488A.

2.7 Locking the chassis using padlocks

This locking device locks the circuit breaker in the chassis and prevents the racking handle from being inserted.
Up to 3 Ø 5-8 mm padlocks can be installed.

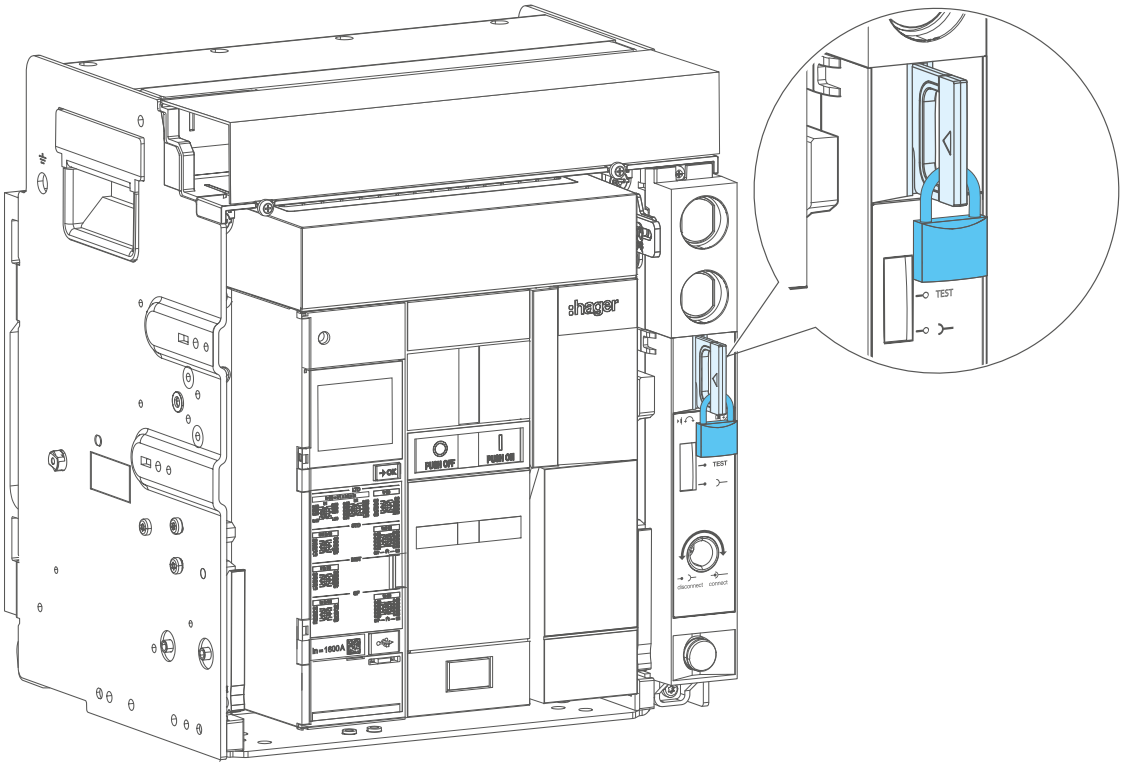

To activate the locking device:

	Action	Illustration
1	Check that the circuit breaker is in one of the 3 stable states (Connected, Test or Disconnected) and then that the racking handle is not already inserted into the racking-in/racking-out hole. Pull on the padlocking and position acknowledgement tab.	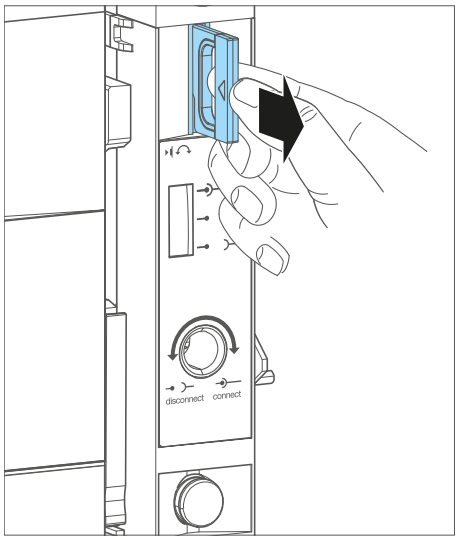

	Action	Illustration
2	Position the padlock on the tab and close it.	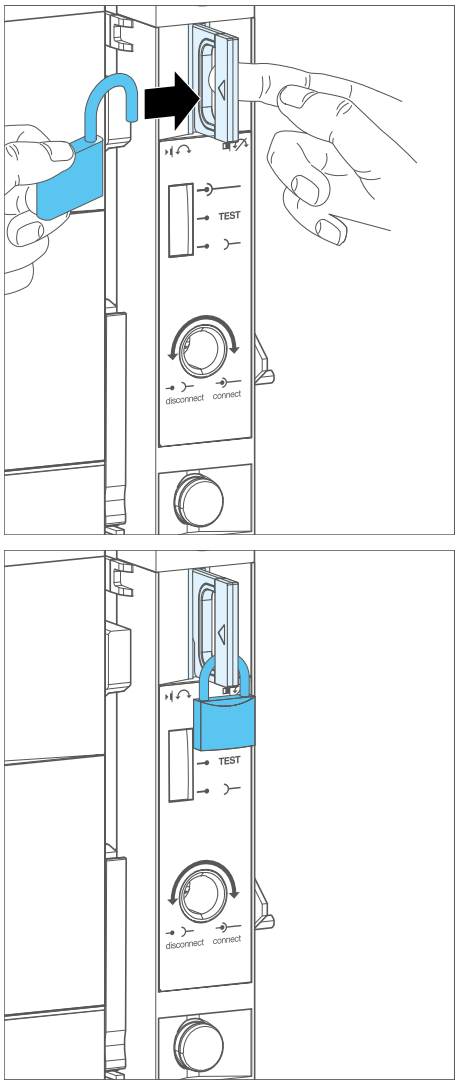
3	Check to ensure that it is not possible to insert the racking handle into the racking-in/racking-out hole.	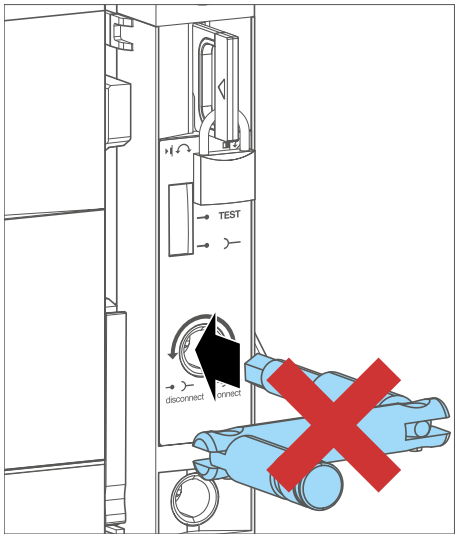

	Action	Illustration
4	To unlock the device, pull and hold the padlocking and position acknowledgement tab then remove the padlock.	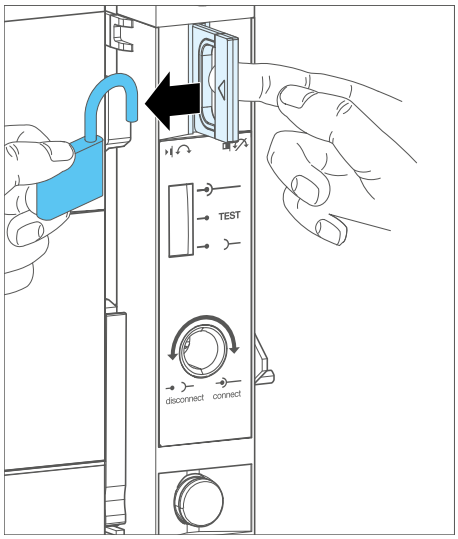
5	Check that the padlocking and position acknowledgement tab returns to its initial position.	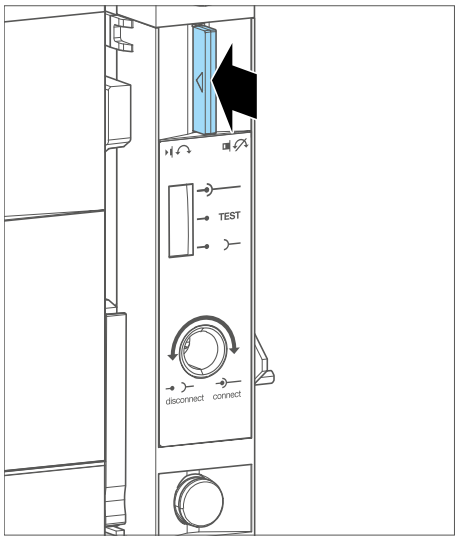
6	Check that it is now possible to insert the racking handle into the racking-in/racking-out hole.	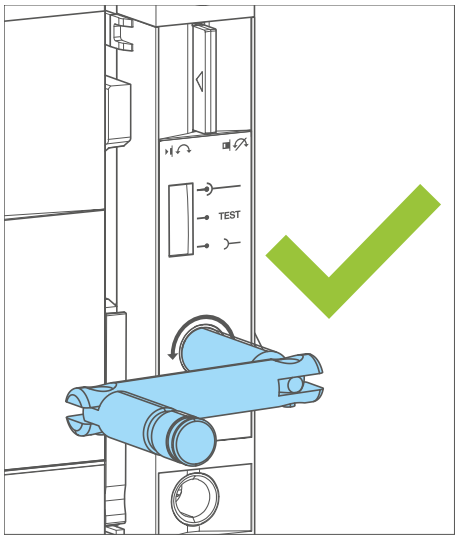

2.8 Locking the chassis using keylocks

This locking device locks the circuit breaker in the chassis and prevents the racking handle from being inserted. Several types of locks can be installed.

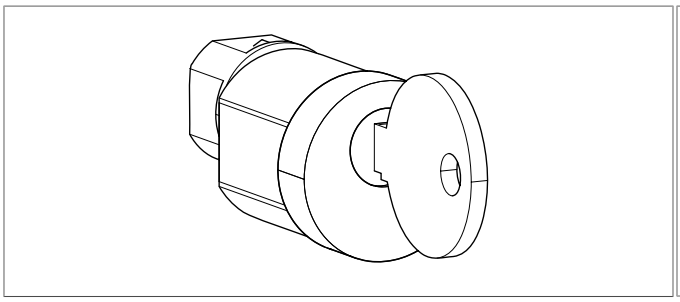

Ronis type lock

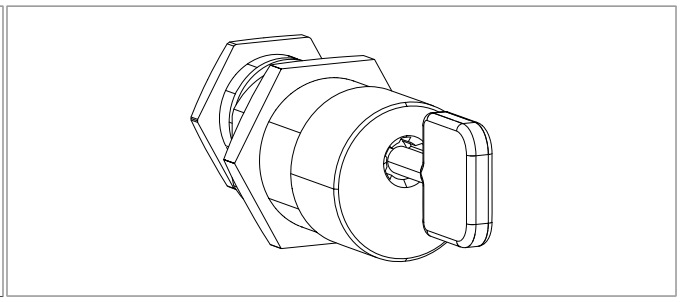

Profalux type lock (not provided in our offer)

Up to 2 locks can be installed in the housing.

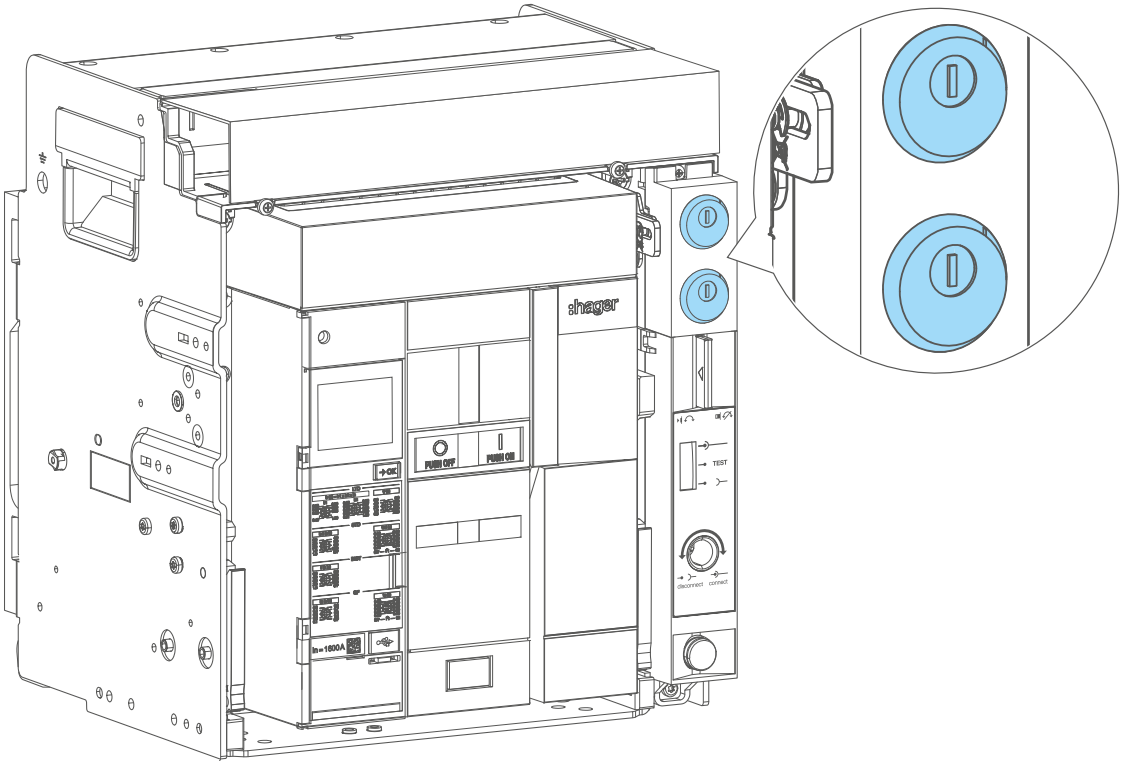

To activate or deactivate the locking device:

	Action	Illustration
1	Check that the lock is in the vertical position. Alternatively that the key is inserted in the vertical position.	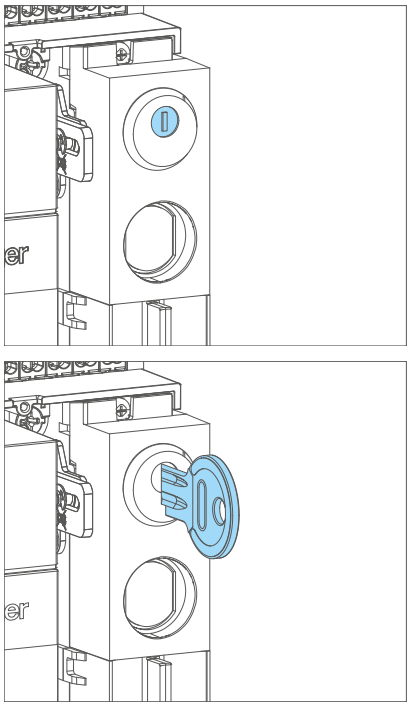
2	Check to ensure that it is not possible to insert the racking handle into the racking-in/racking-out hole.	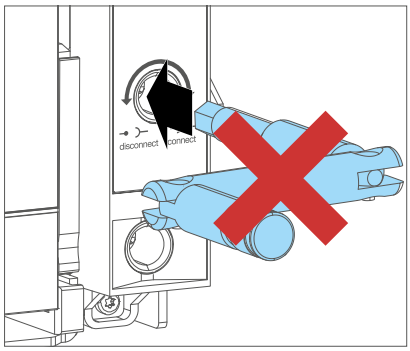

Information

If one or 2 locks are installed, a single key in the vertical position prevents the introduction of the racking handle into the racking-in/racking-out hole.

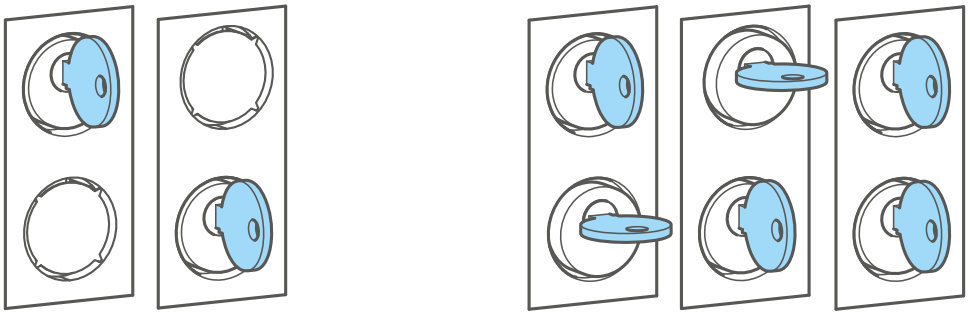

	Action	Illustration
3	To unlock the device, insert the key into the lock.	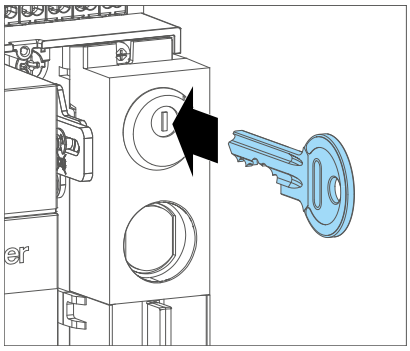
4	Turn the key clockwise. to put it in the horizontal position.	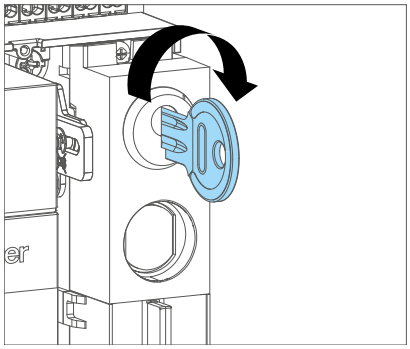 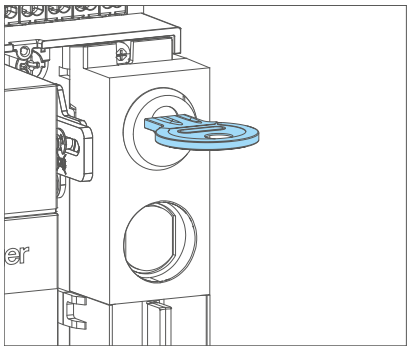
5	Check that it is now possible to insert the racking handle into the racking-in/racking-out hole.	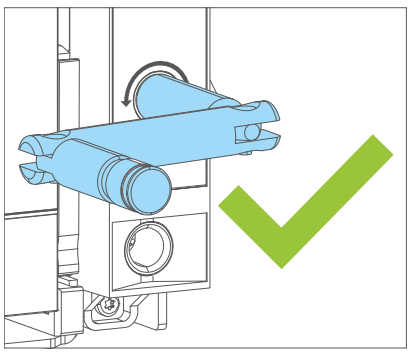

Information

If 2 locks are installed, both keys must be in the horizontal position to allow the introduction of the racking handle into the racking-in/racking-out hole.

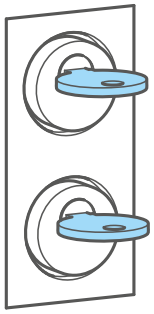

	Action	Illustration
6	Remove the racking handle from the racking-in/racking-out hole. The key remains locked in the lock. To remove it, turn the key anti-clockwise...	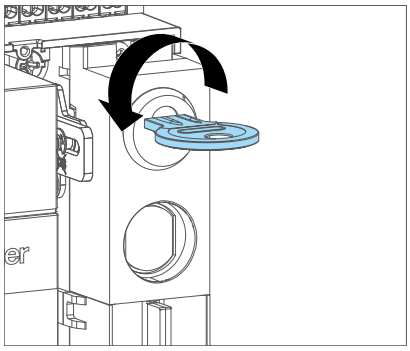
	until it is in the vertical position.	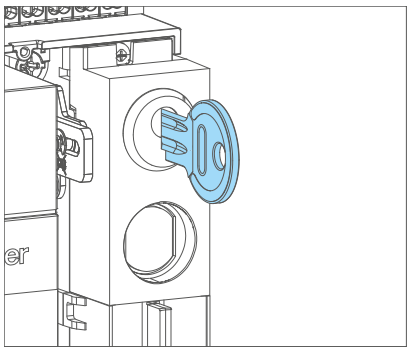
		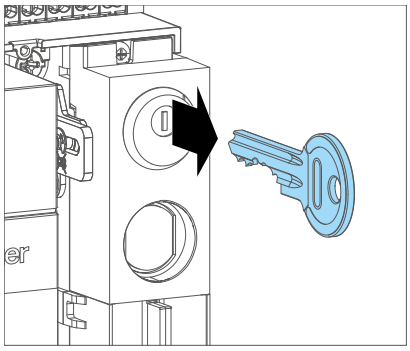

Information

Refer to the instruction manual to install the locking accessory 6LE007677A.

2.9 RI open door racking interlock

This locking device prevents the racking handle being inserted into the circuit breaker rack in/rack out mechanism when the door of the electrical cabinet is open.

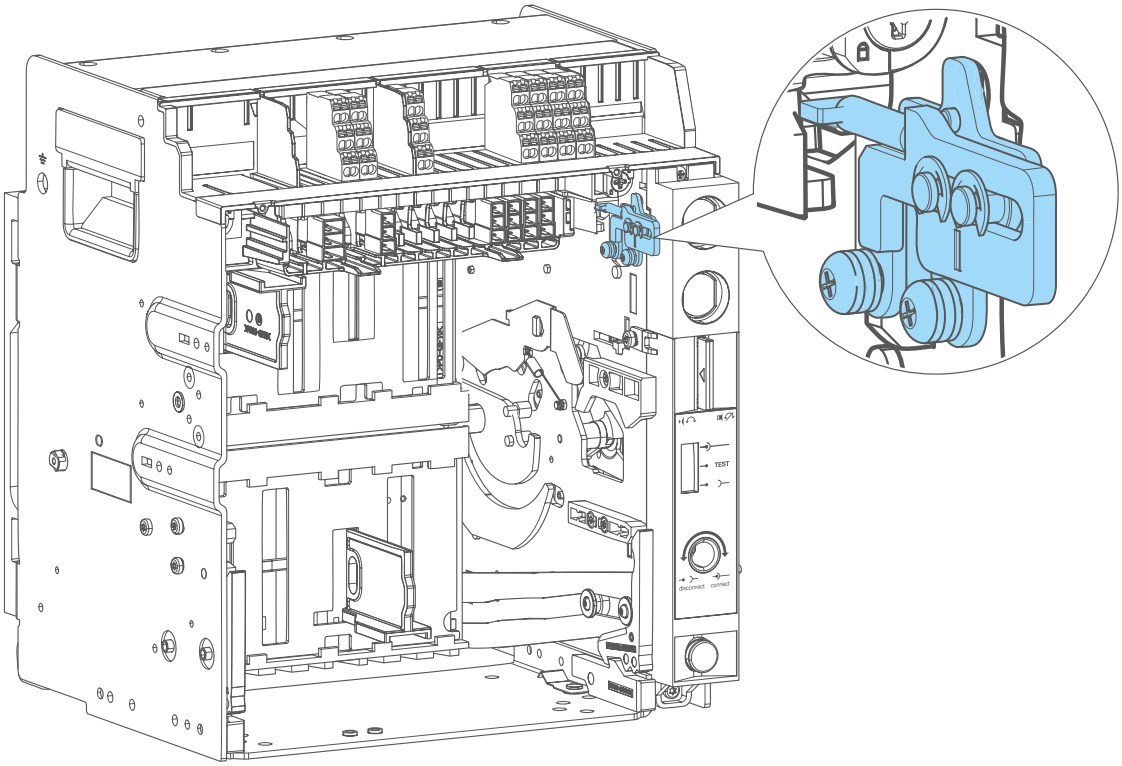

To activate the locking device:

	Action	Illustration
1	Open the electrical cabinet door.	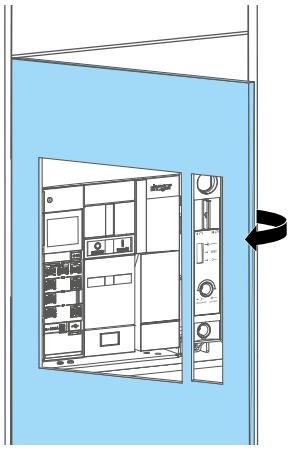

	Action	Illustration
2	Check to ensure that it is not possible to insert the racking handle into the racking-in/racking-out hole.	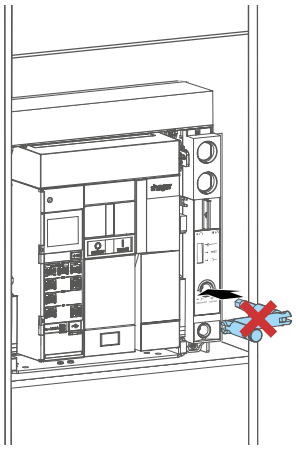
3	Close the electrical cabinet door again.	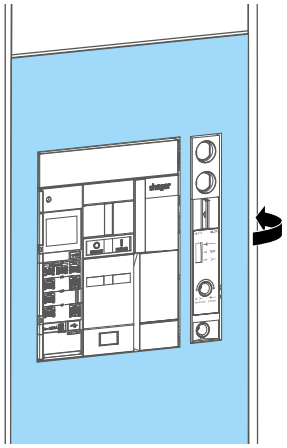
4	Check that it is now possible to insert the racking handle into the racking-in/racking-out hole.	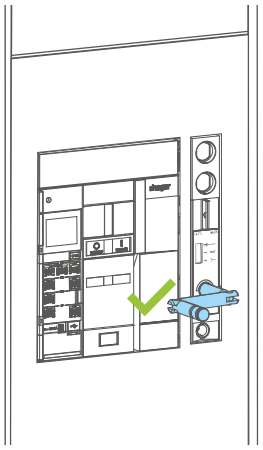

Information

Refer to the instruction manual to install the locking accessory 6LE007491A.

2.10 Mechanical interlock

The mechanical interlocking kit is used to interlock 2 to 3 circuit breakers installed vertically or horizontally in the electrical cabinet.

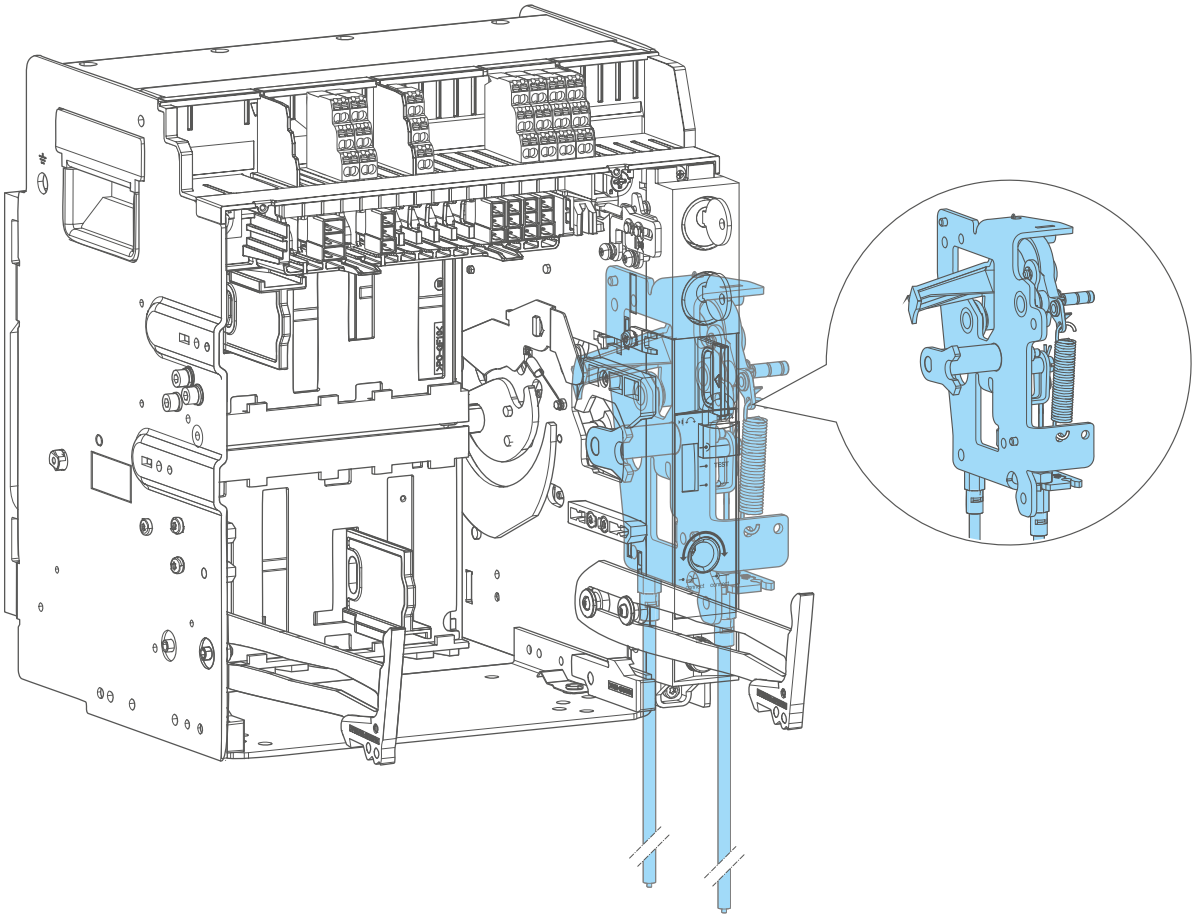

In this way it prevents interlocked circuit breakers closing at the same time according to the types of application described below:

<table>
<tr><th>Diagram</th><th>Type</th><th>Locking logic</th><th>Description</th></tr>
<tr><td>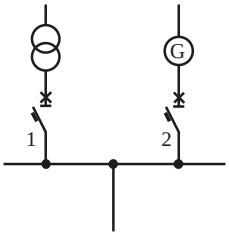
</td><td>2S</td><td><table>
<tr><th>ACB 1</th><th>ACB 2</th></tr>
<tr><td>0</td><td>0</td></tr>
<tr><td>1</td><td>0</td></tr>
<tr><td>0</td><td>1</td></tr>
</table></td><td>Only one device out of two can be closed.</td></tr>
<tr><td>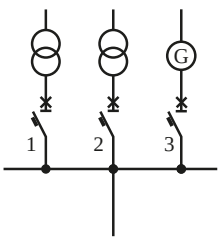
</td><td>3S</td><td><table>
<tr><th>ACB 1</th><th>ACB 2</th><th>ACB 3</th></tr>
<tr><td>0</td><td>0</td><td>0</td></tr>
<tr><td>1</td><td>0</td><td>0</td></tr>
<tr><td>0</td><td>1</td><td>0</td></tr>
<tr><td>0</td><td>0</td><td>1</td></tr>
</table></td><td>Only one device out of three can be closed.</td></tr>
</table>

Diagram	Type	Locking logic			Description
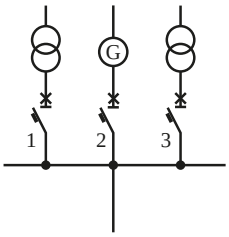	3SX	**ACB 1**	**ACB 2**	**ACB 3**	Allows two devices to be closed if the third is open. The latter can only be closed if the other two are open.
		0	0	0	
		1	0	0	
		0	0	1	
		1	0	1	
		0	1	0	
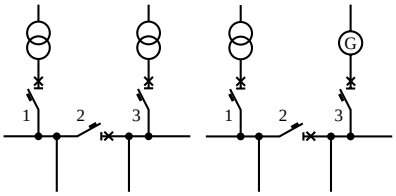	3C	**ACB 1**	**ACB 2**	**ACB 3**	Two devices out of three can be closed at the same time.
		0	0	0	
		1	0	0	
		0	1	0	
		0	0	1	
		0	1	1	
		1	1	0	
		1	0	1	

3 Positions of the drawout circuit breaker in the chassis

The position of the circuit breaker in the chassis is shown by the mechanical position indicator of the moving part on the front. There are three different positions, connected, test and disconnected.

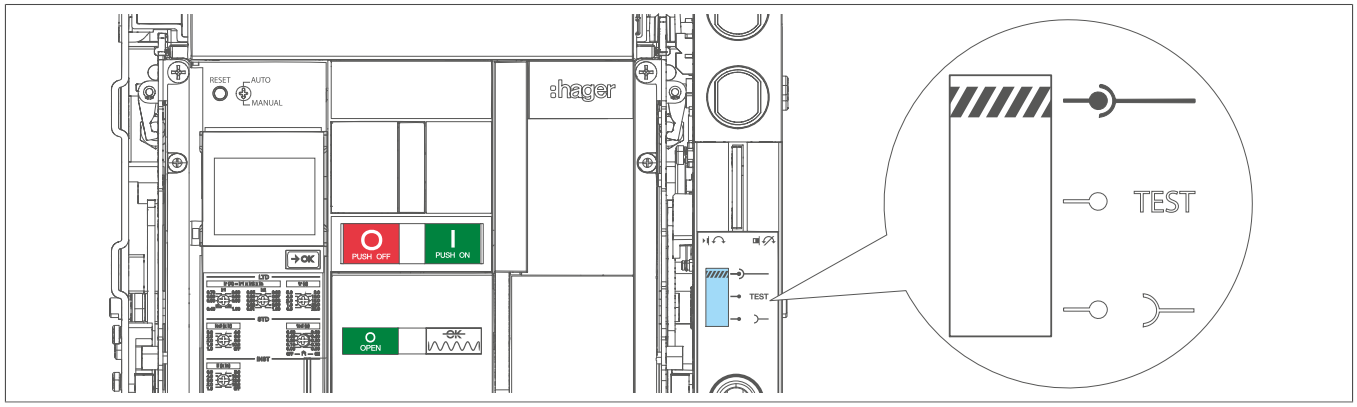

Circuit breaker position	Circuit breaker status	Mechanical position indicator of the moving part
Disconnected	The circuit breaker can be withdrawn from or inserted into the chassis.	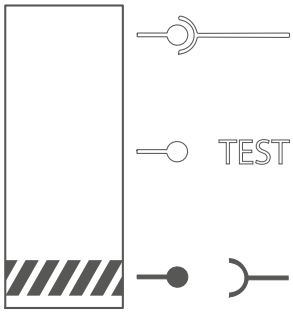
Test	The circuit breaker's power contacts are isolated. All of the auxiliaries remain electrically connected so that they remain functional.	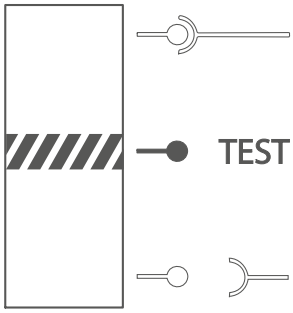
Connected	The connections on the circuit breaker are connected to the jaw contacts on the chassis. The circuit breaker is ready for operation.	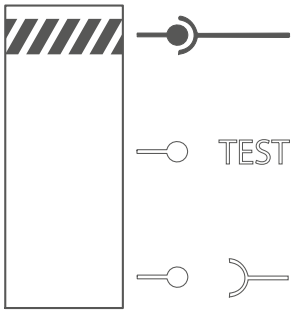

4 Operation of the drawout circuit breaker in the chassis

Changing from one position to another is done using a racking handle.
Before changing from one position to another, the padlocking and position acknowledgement tab must be pressed.

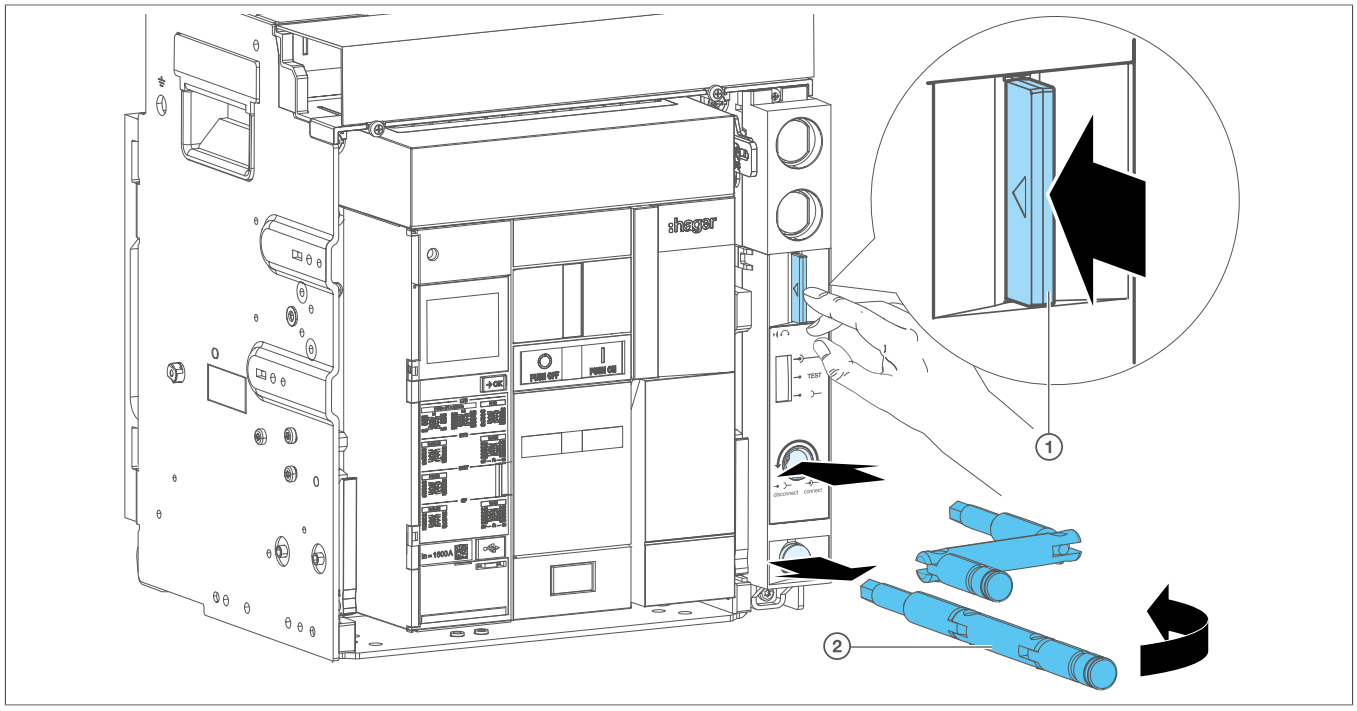

① Padlocking and position acknowledgement tab
② Handle

4.1 Moving from the Connected position to the Test position

Warning

Hazard due to electric shock.
Make sure that the device is only operated by qualified personnel in accordance with the installation standards in force in the relevant country.

To change from Connected position to Test position:

	Action	Illustration
1	Verify that the mechanical position indicator signals that the circuit breaker is in the Connected position.	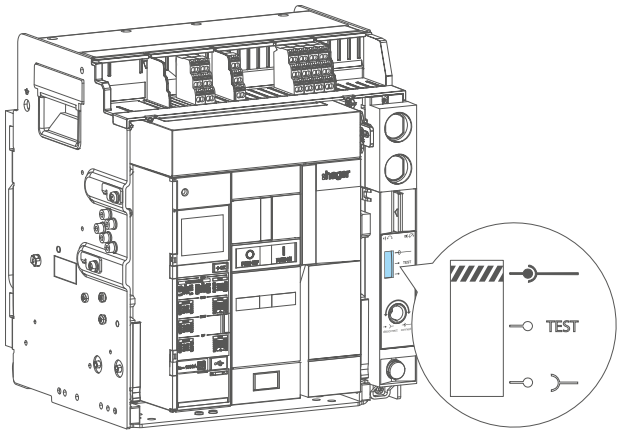
2	Open the circuit breaker by pressing the opening push button .	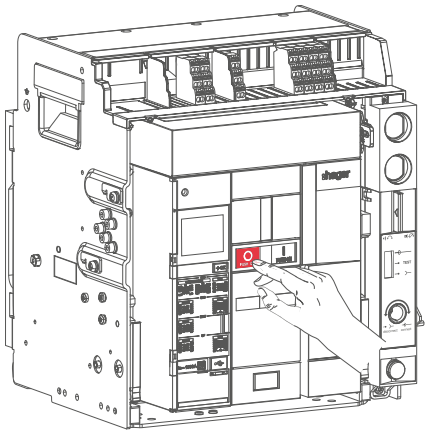
3	Take the racking handle out of its housing and insert it in the racking-in/racking-out hole.	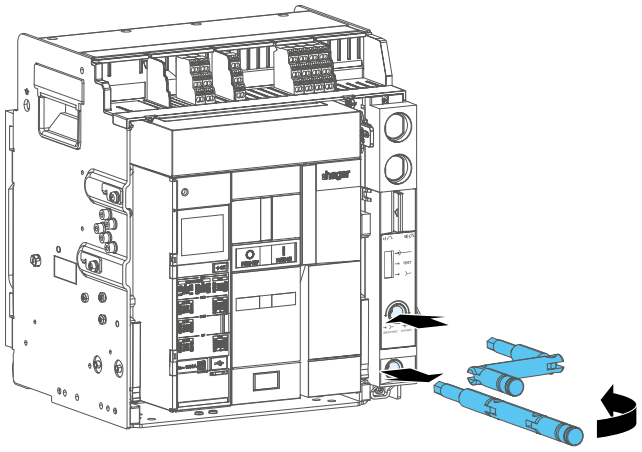

	Action	Illustration
4	Press the padlocking and position acknowledgement tab.	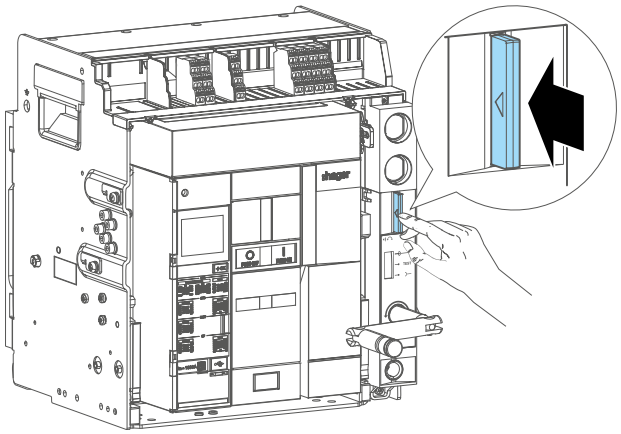
5	Turn the racking handle anti-clockwise until: – the mechanical position indicator displays the Test position, – the padlock latch and position acknowledgement tab comes out of its housing.	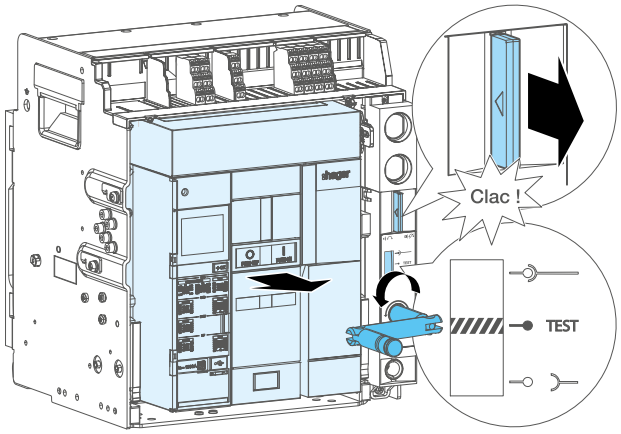

4.2 Moving from the Test position to the Disconnected position.

Notice

Risk of circuit breaker falling.
Risk of mechanical damage.
If the chassis is not fitted in an electrical panel, ensure it is correctly fastened before changing position.

Danger

Risk of circuit breaker falling.
Risk of crushing injury.
If the chassis is not mounted in an electrical panel, make sure it is properly secured before changing position.

To change from Test position to Disconnected position:

	Action	Illustration
1	Verify that the mechanical position indicator signals that the circuit breaker is in the Test position.	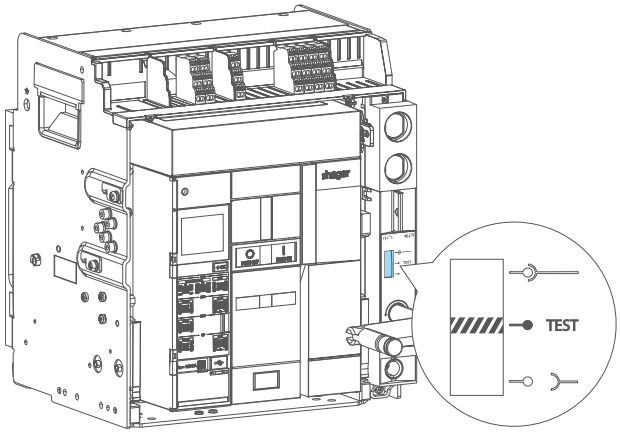
2	Press the padlocking and position acknowledgement tab.	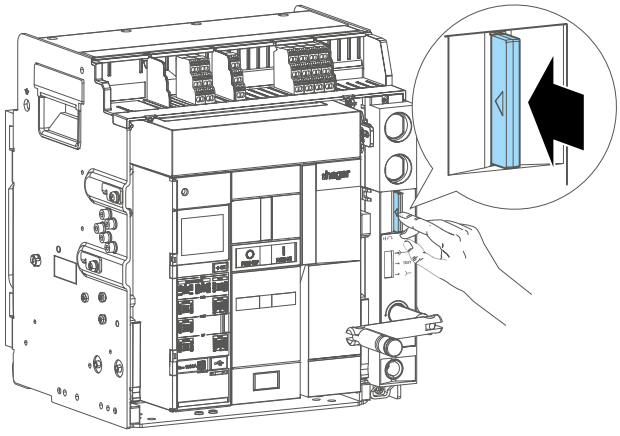

	Action	Illustration
3	Turn the racking handle anti-clockwise until: – the mechanical position indicator displays the Disconnected position, – the padlock latch and position acknowledgement tab comes out of its housing.	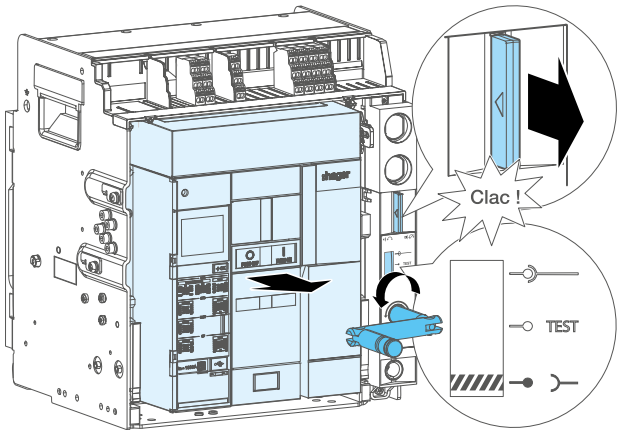

4.3 Moving from the Disconnected position to the Test position

Warning

Hazard due to electric shock.
Make sure that the device is only operated by qualified personnel in accordance with the installation standards in force in the relevant country.

To change from Disconnected position to Test position:

	Action	Illustration
1	Verify that the mechanical position indicator signals that the circuit breaker is in the Disconnected position.	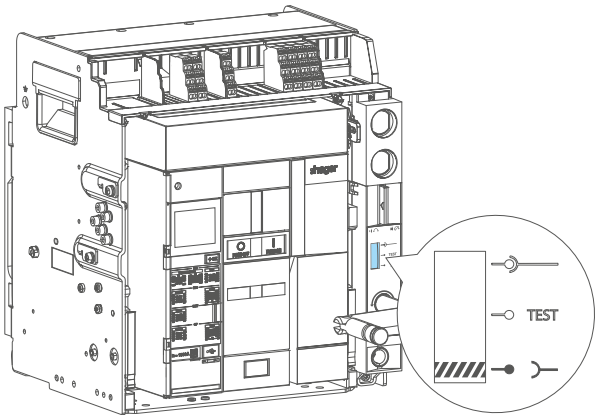
2	Press the padlocking and position acknowledgement tab.	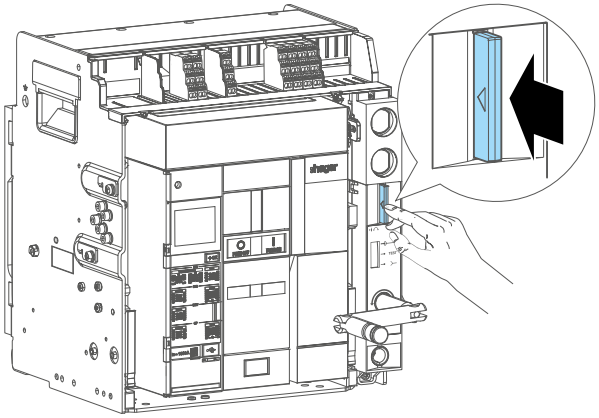
3	Turn the racking handle clockwise until: – the mechanical position indicator displays the Test position, – the padlock latch and position acknowledgement tab comes out of its housing.	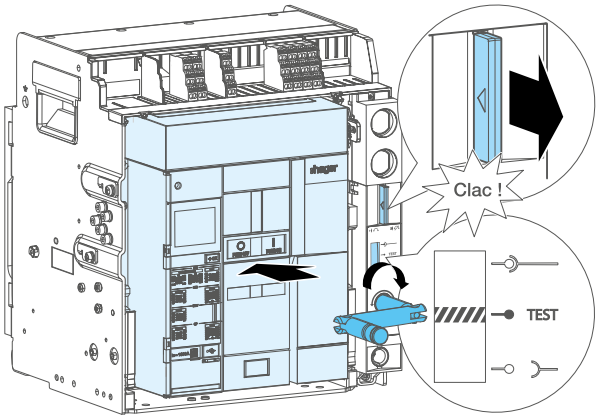

4.4 Moving from the Test position to the Connected position

To change from Test position to Connected position:

	Action	Illustration
1	Verify that the mechanical position indicator signals that the circuit breaker is in the Test position.	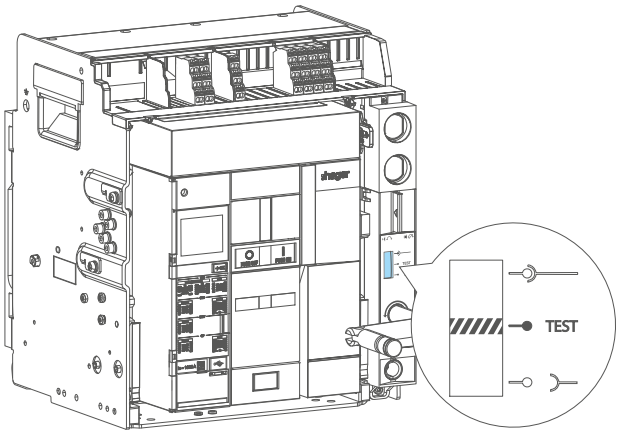
2	Press the padlocking and position acknowledgement tab.	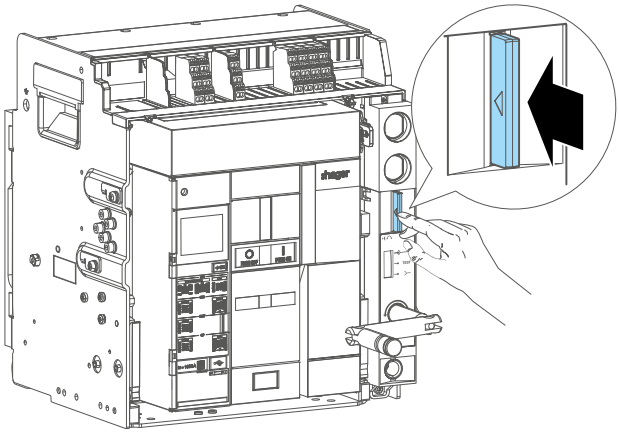
3	Turn the racking handle clockwise until: – the mechanical position indicator displays the Connected position, – the padlock latch and position acknowledgement tab comes out of its housing.	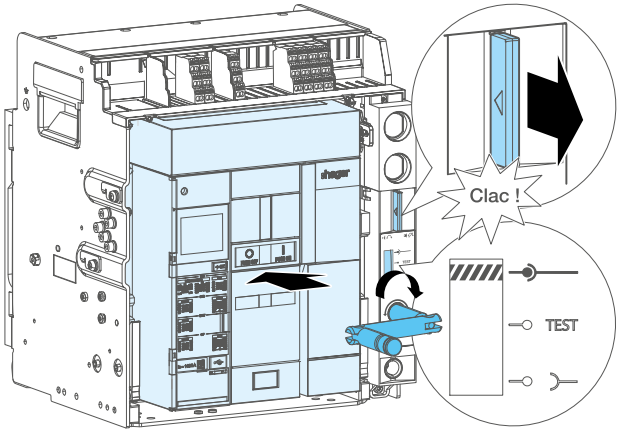

	Action	Illustration
4	Remove, then store the racking handle in its housing.	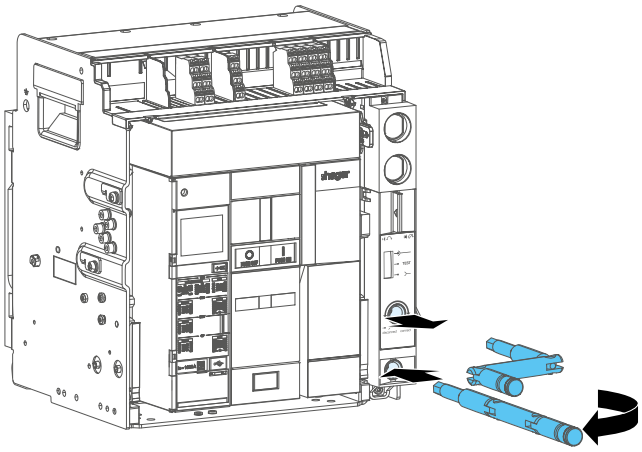

5 Removing the drawout circuit breaker

Notice

Risk of circuit breaker falling.
Risk of mechanical damage.
Before handling the circuit breaker, ensure that the chassis is secured in the electrical panel. Ensure the device is only handled by qualified personnel equipped with lifting equipment and suitable safety equipment.

Danger

Risk of circuit breaker falling.
Risk of crushing injury.
Before handling the circuit breaker, ensure that the chassis is secured in the electrical panel. Ensure the device is only handled by qualified personnel equipped with lifting equipment and suitable safety equipment.

To remove the circuit breaker from the chassis:

	Action	Illustration
1	Check that the circuit breaker is in the Disconnected position (see Chapter 4.1, "Moving from the Connected position to the Test position" and see Chapter 4.2, "Moving from the Test position to the Disconnected position.").	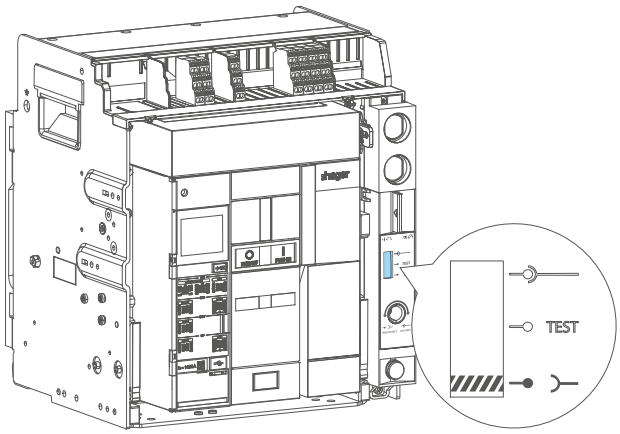
2	The circuit breaker remains in the chassis in the Disconnected position. Pull the guide rails as far as possible while holding the upper part of the circuit breaker.	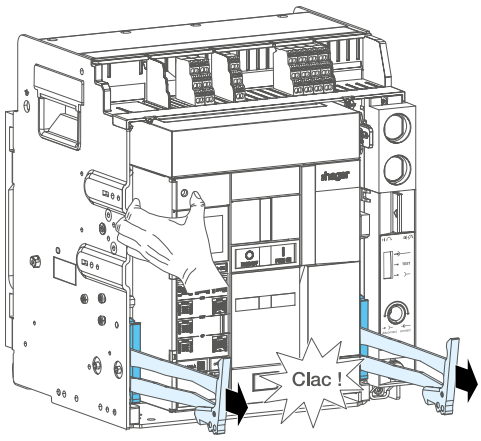

	Action	Illustration
3	Slide the circuit breaker from the chassis on its guide rails.	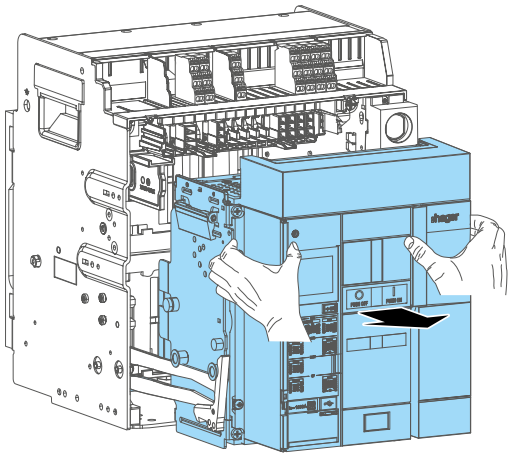
4	Remove the circuit breaker from the guide rails using an appropriate lifting device.	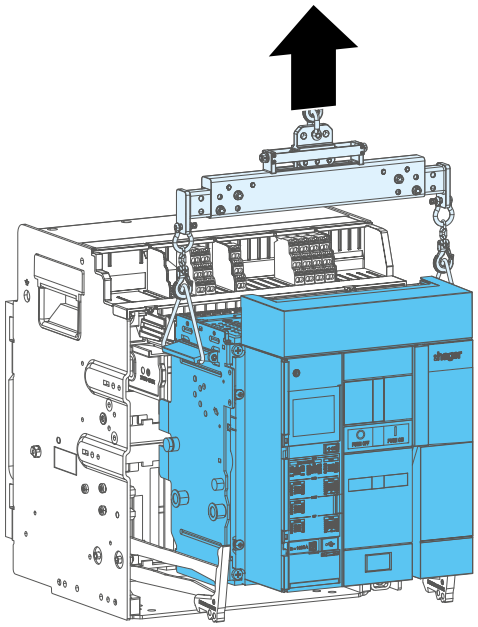

6 Inserting the drawout circuit breaker

Notice

Risk of circuit breaker falling.
Risk of mechanical damage.
Before handling the circuit breaker, ensure that the chassis is secured in the electrical panel. Ensure the device is only handled by qualified personnel equipped with lifting equipment and suitable safety equipment.

Danger

Risk of circuit breaker falling.
Risk of crushing injury.
Before handling the circuit breaker, ensure that the chassis is secured in the electrical panel. Ensure the device is only handled by qualified personnel equipped with lifting equipment and suitable safety equipment.

To insert the circuit breaker into the chassis:

	Action	Illustration
1	Ensure that the chassis is in the Disconnected position.	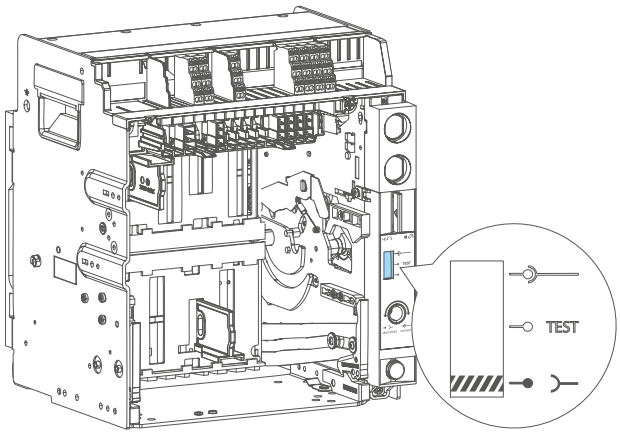
2	Pull the guide rails as far as possible.	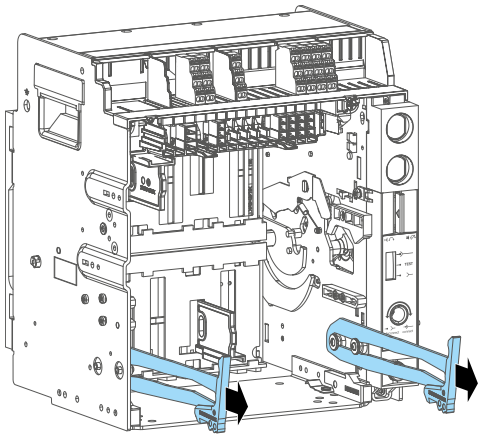

	Action	Illustration
3	Using suitable lifting equipment, position the circuit breaker on the guide rails.	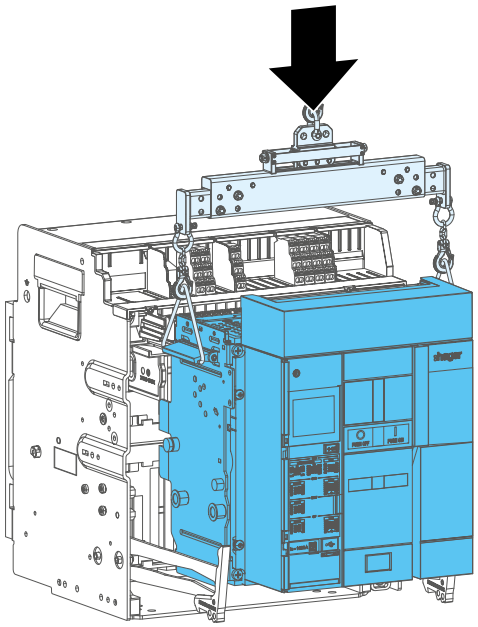
4	Remove the lifting equipment.	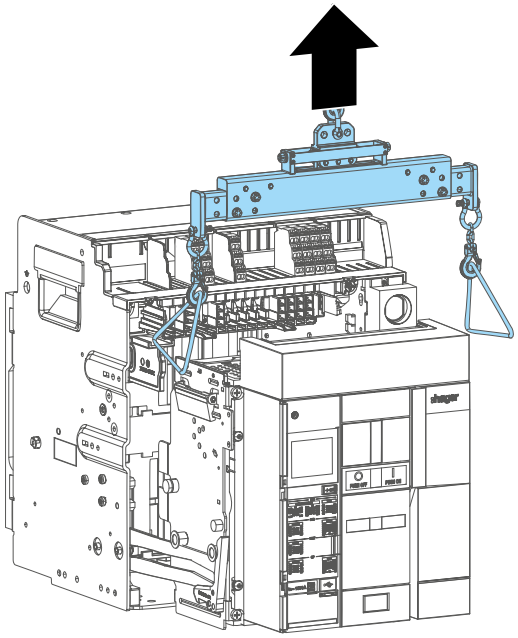

	Action	Illustration
5	Push the circuit breaker to the back of the chassis without pushing on the guide rails.	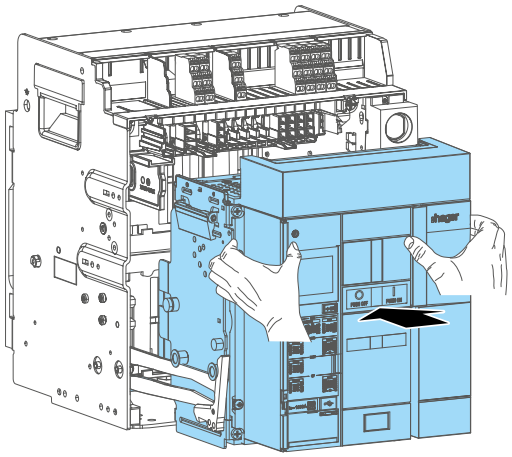
6	Push the guide rails to the back of the chassis.	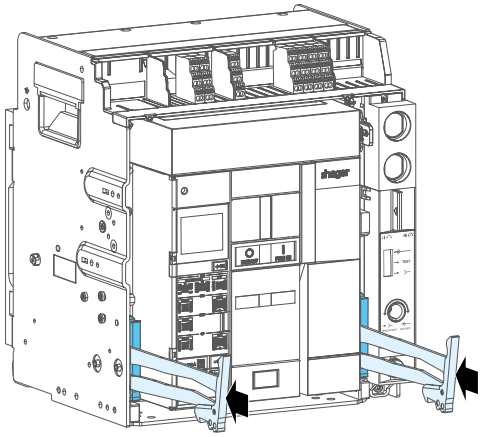

7 Closing the circuit breaker after a trip operation

After tripping, the circuit breaker is open, the closing spring is discharged if a charging motor is not installed. The circuit breaker is open, the spring is charged if a charging motor is installed. The trip unit display flashes.
To trouble-shoot the tripping root cause, refer to the user manual for hw+ sentinel electronic trip units 6LE009420A and to the User manual for hw+ sentinel Energy electronic trip units 6LE009417A.

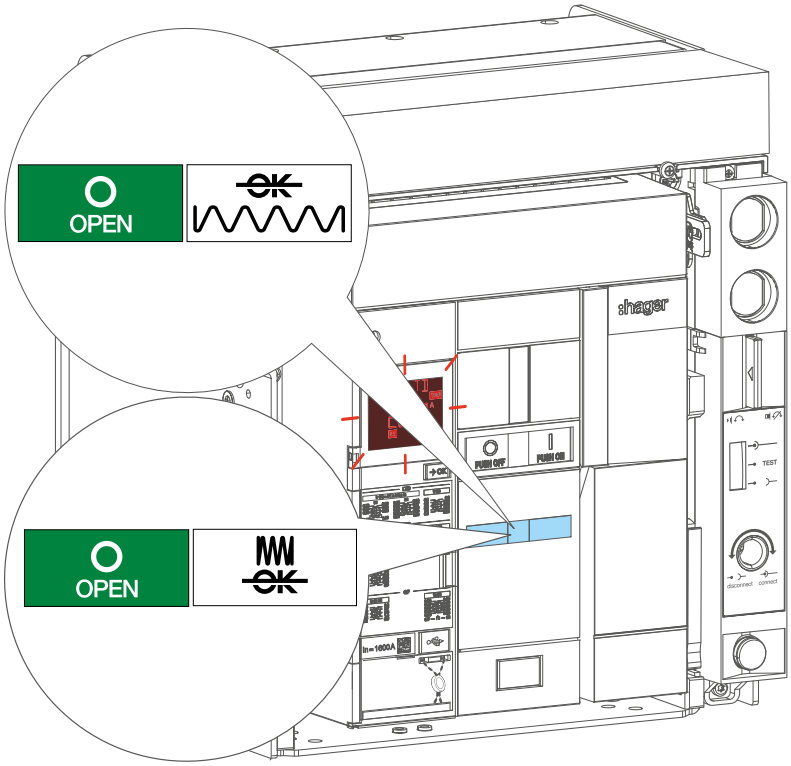

Danger

Risk of electric shock, explosion or arc flash.
Inspect the electrical installation and eliminate the cause of the trip before closing the circuit breaker.
Never close a circuit breaker locally or remotely without first ensuring that the installation complies with safety standards.

To close the circuit breaker:

	Action	Illustration
1	Charge the closing spring using the charging handle until the status of the indicator changes. If a charging motor is fitted, proceed to step 2.	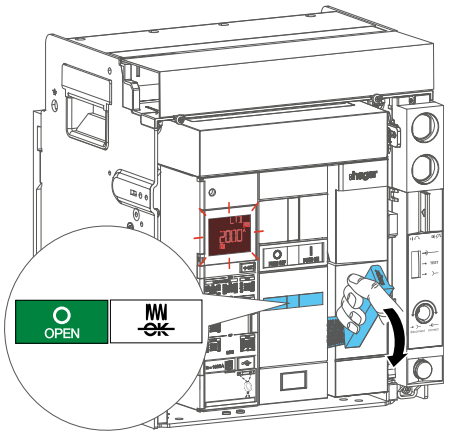
2	If the circuit breaker reset is configured to **MANUAL**, proceed to step 3.	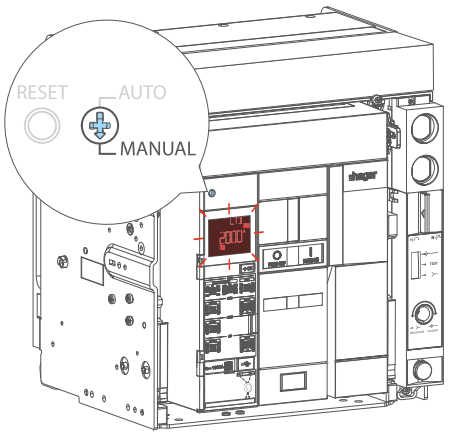
	If the circuit breaker reset type is set to **AUTO**, proceed to step 5.	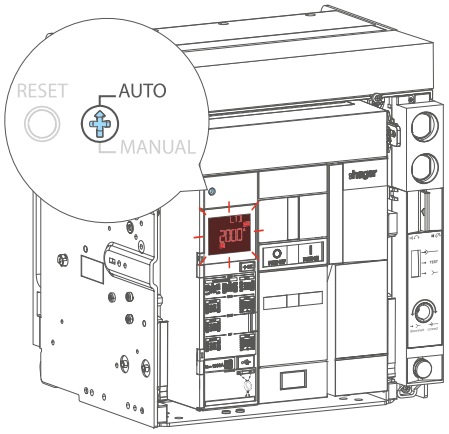

	Action	Illustration
3	Ensure that the indicators indicate a charged closing spring and that the circuit breaker cannot be closed.	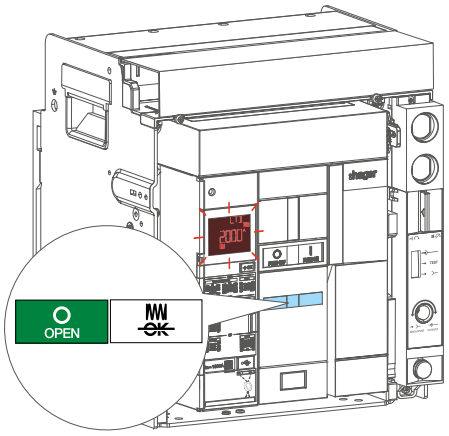
4	Press the circuit breaker RESET re-arm button.	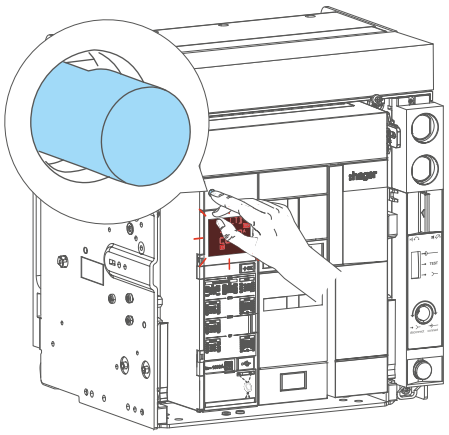
5	Check that the closing spring is charged. The circuit breaker is now ready to be closed.	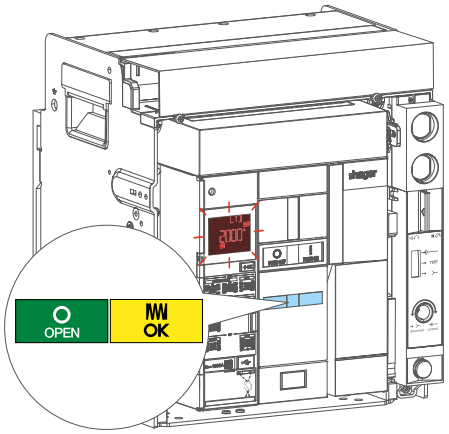

	Action	Illustration
6	Then reset the trip unit display. Briefly press the →OK key for a sentinel trip unit and the OK key for a sentinel Energy trip unit.	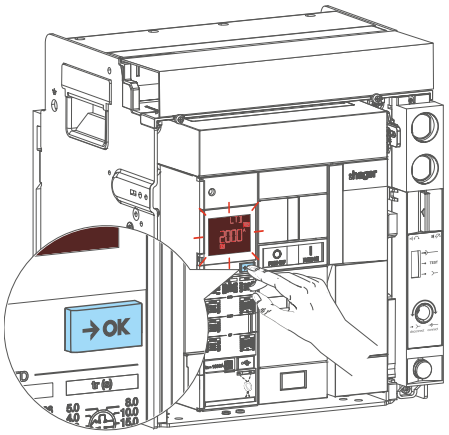 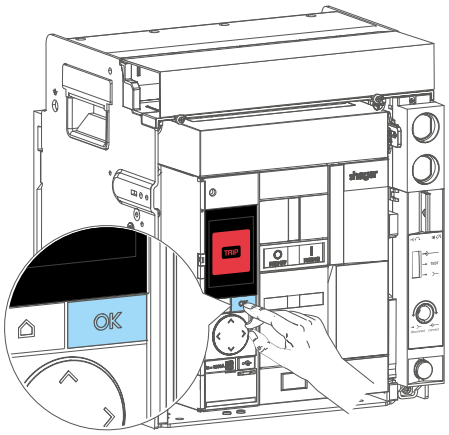
7	The sentinel trip unit display stops flashing: and becomes steady.	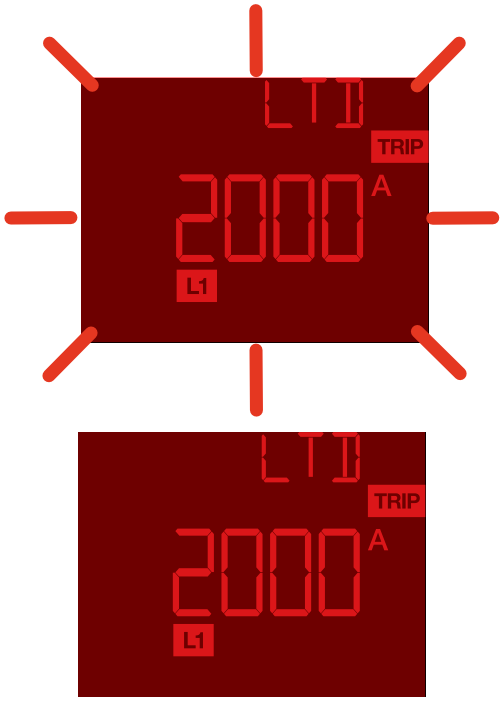

	Action	Illustration
8	The sentinel Energy trip unit display switches from this flashing message:	
	to the following flashing message.	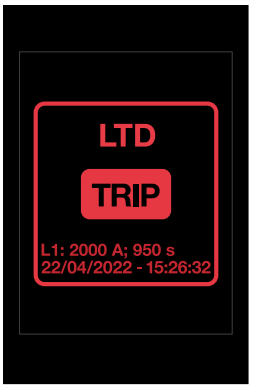
9	Press the →OK button **for more than 3 s** for a sentinel trip unit	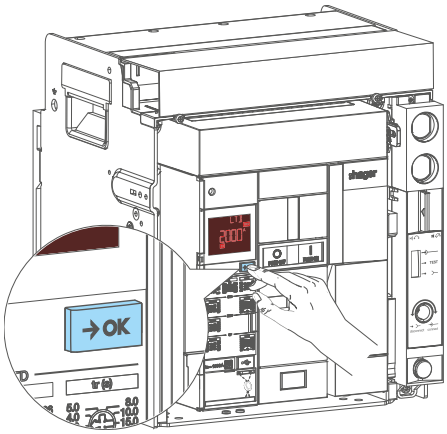
	and the OK button for a sentinel Energy trip unit.	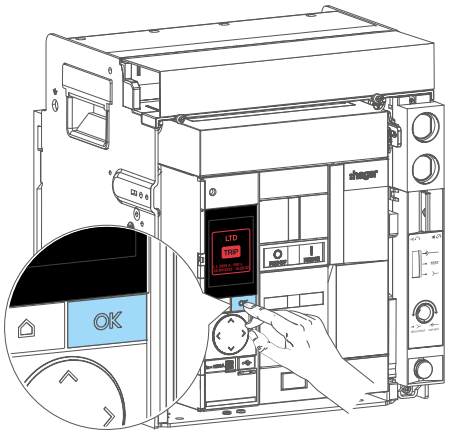

	Action	Illustration
10	Check that the fault is cleared and that the display switches off.	
11	Close the circuit breaker by pressing the closing push button . Verify that the indicators change status and signal that the circuit breaker is closed (CLOSED) and the closing spring discharged.	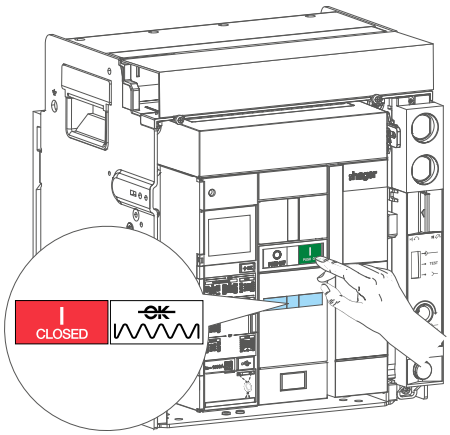
12	If a charging motor is installed and powered, the closing spring charges automatically.	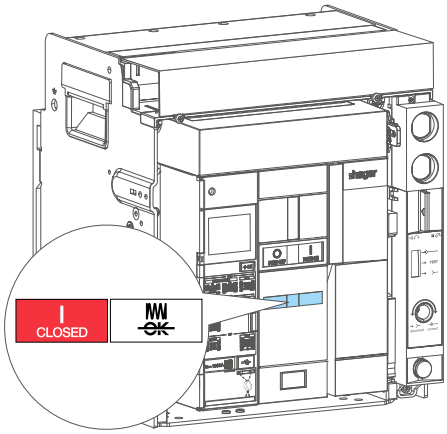
13	Verify that the ReadyToProtect indicator flashes on the sentinel trip unit display or that it is lit on the sentinel Energy trip unit. If the display remains off, connect an external battery to the USB-C socket to perform this check.	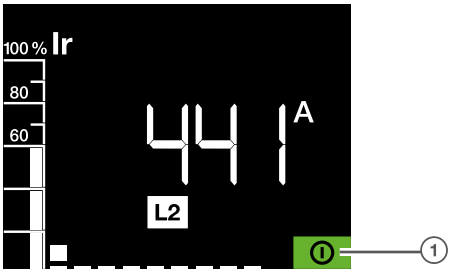 Fig. 1: sentinel trip unit (1) ReadyToProtect indicator

	Action	Illustration
		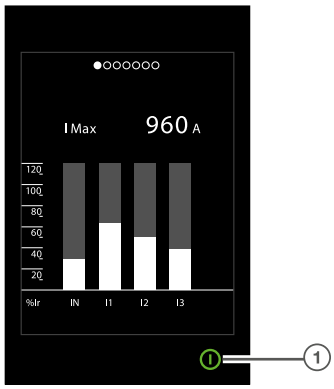 Fig. 2: sentinel Energy trip unit (1) ReadyToProtect indicator

Information

The trip unit must be powered in order for it to perform its protection functions. It is powered as long as a minimum current of 20% of the nominal current In passes through the circuit breaker.

Nevertheless, it is strongly recommended that an external 24 V DC SELV power supply (recommended reference model Hager HTG911H) be connected to terminal block TU to guarantee optimal operation of the trip unit and prevent malfunctions in the electrical installation associated with a breach in the continuity of the trip unit operation.

Hager Electro SAS
BP3

67215 Obernai Cedex
France

T +33 (0) 3 88 49 50 50
F +33 (0) 3 88 49 50 53
info@hager.com
hager.com

2026-11

6LE007331Ae