:hager

6LE090172A – OCOM 152654

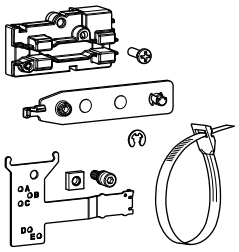

HW2 / HW4 / HW6 (3P) : HWX058HSA
HW6 (4P) : HWX059HSA

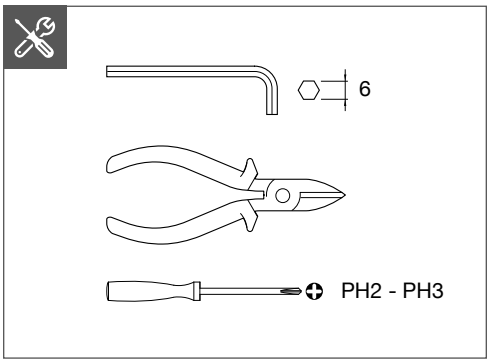

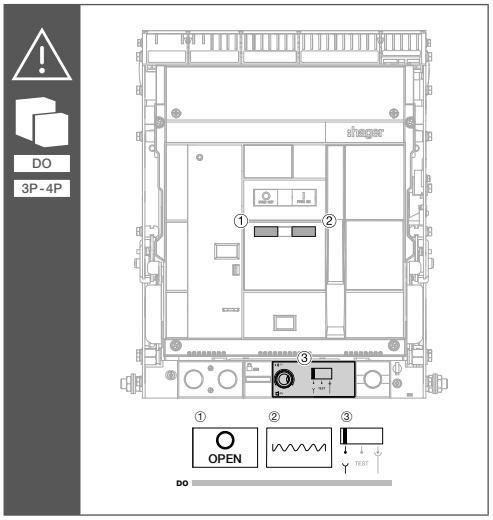

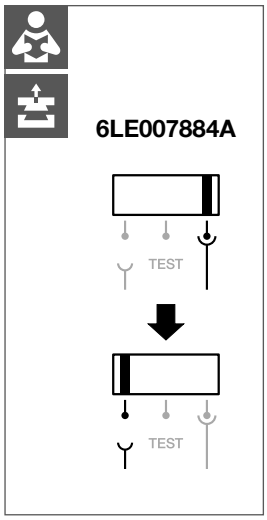

01

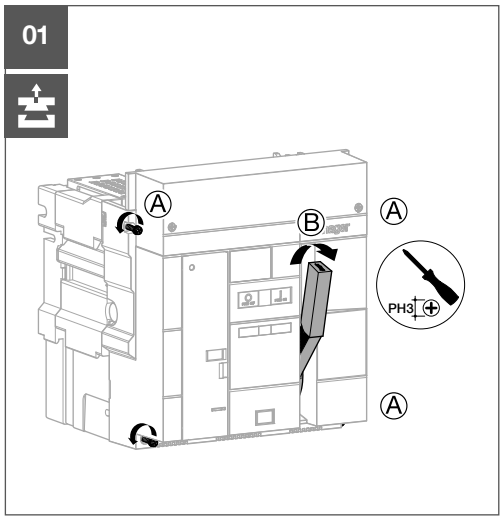

02

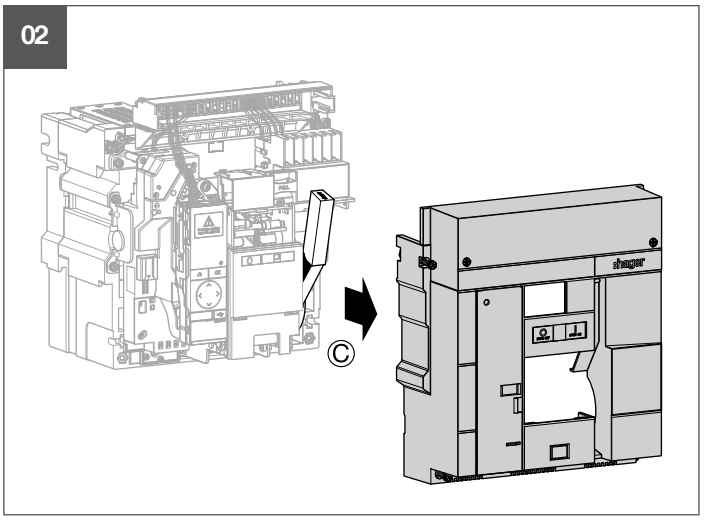

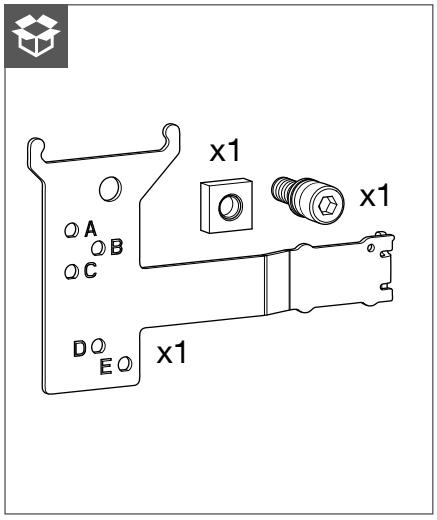

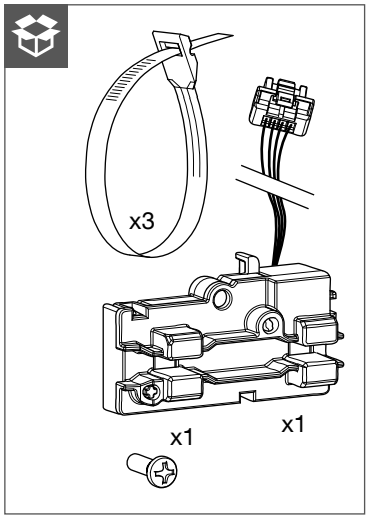

01

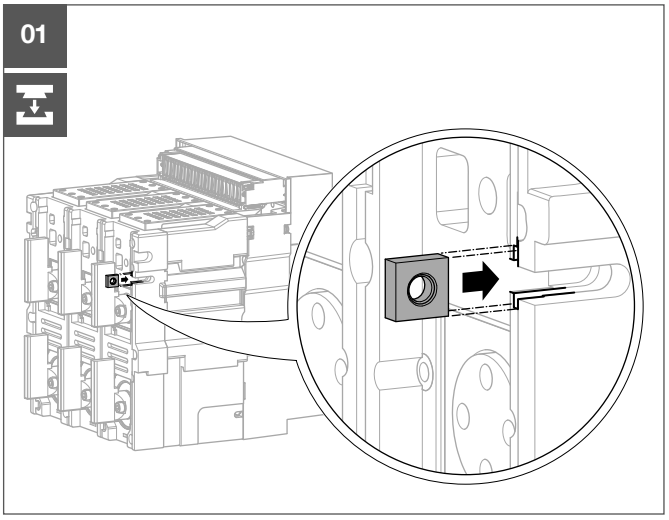

02

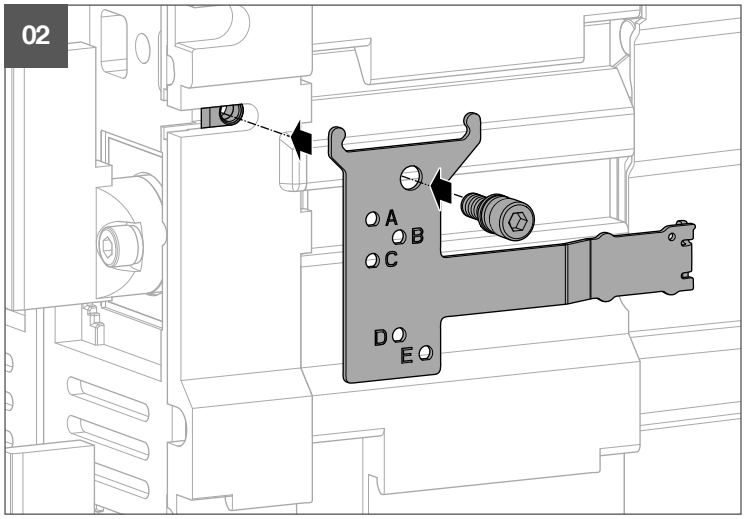

03

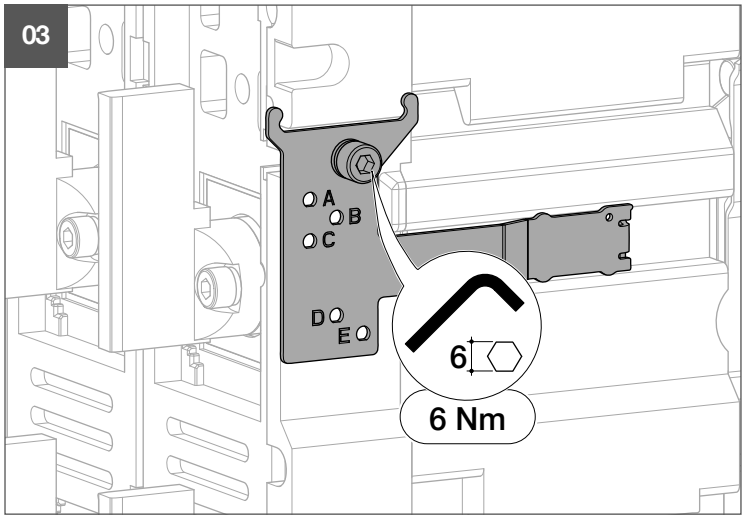

04

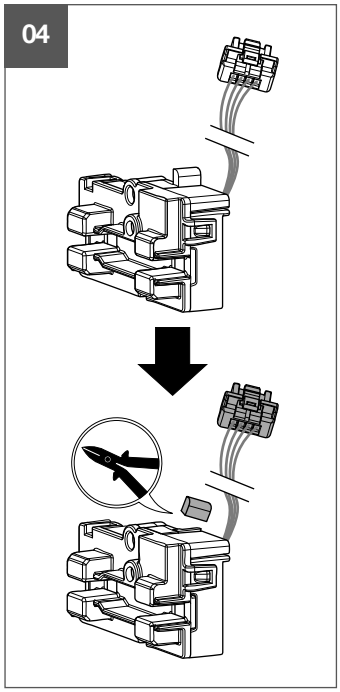

05

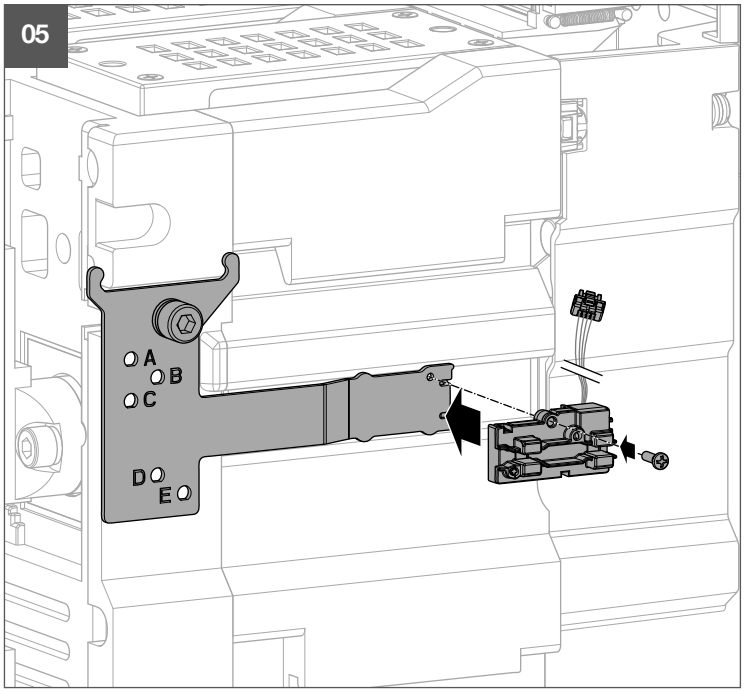

06

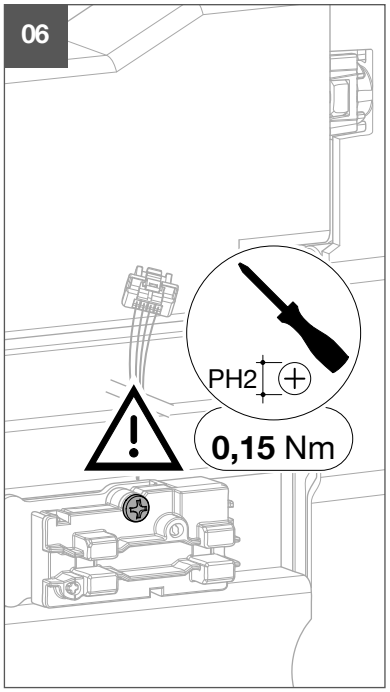

07

HW2
3P

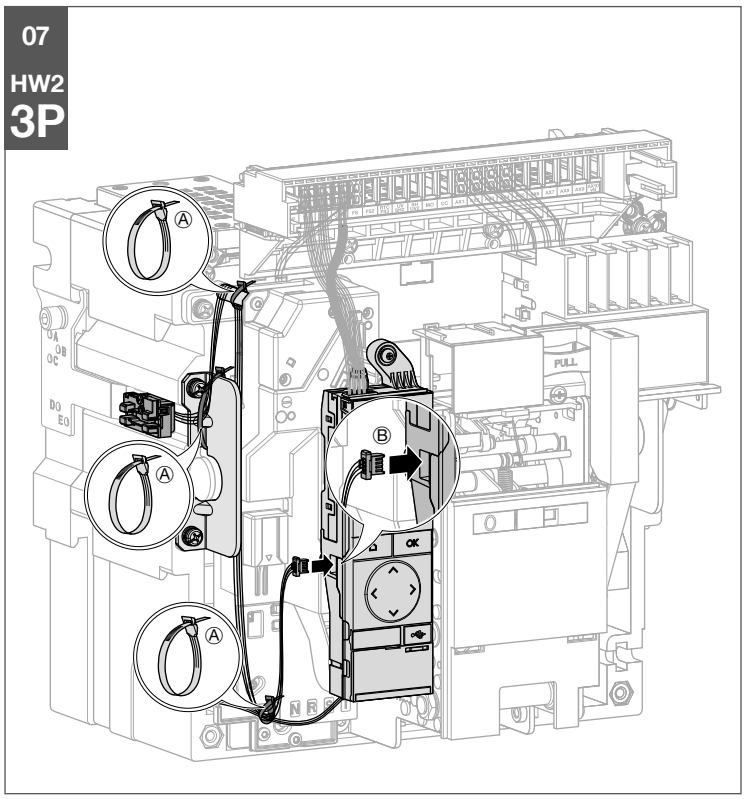

08

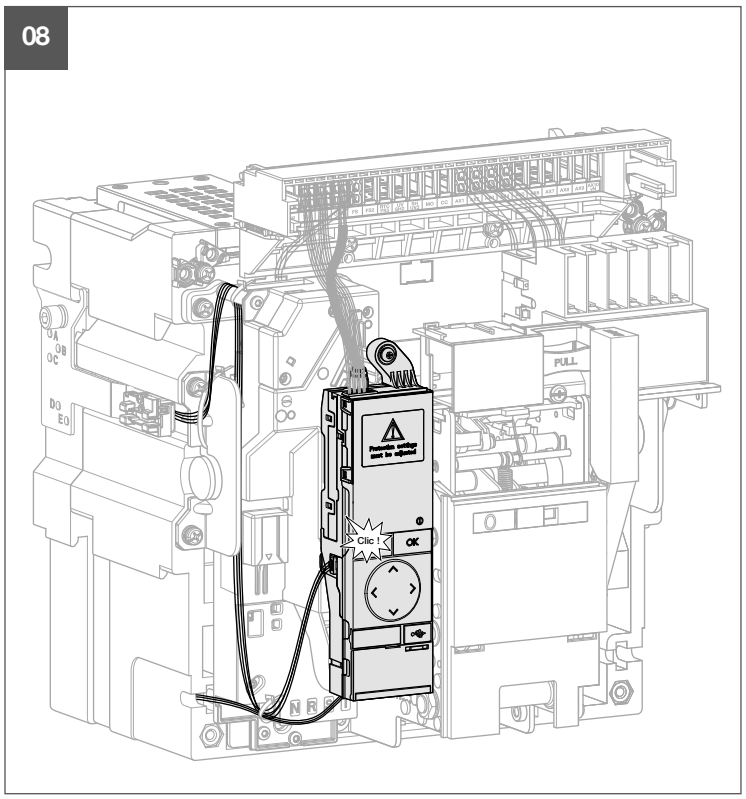

HW2
4P

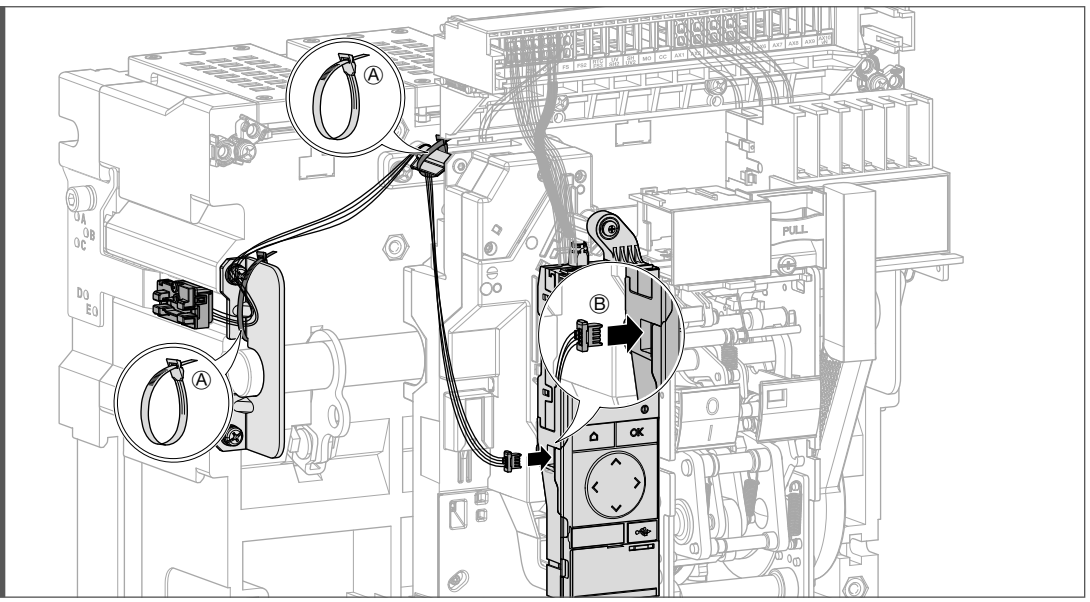

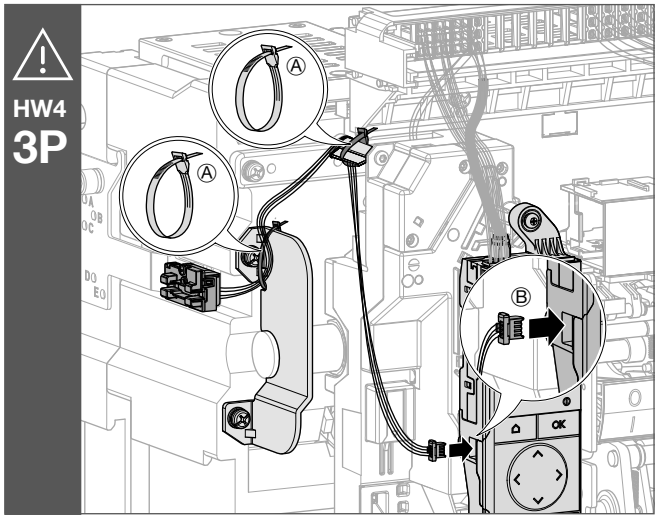
HW4
3P
A
A
B
OK

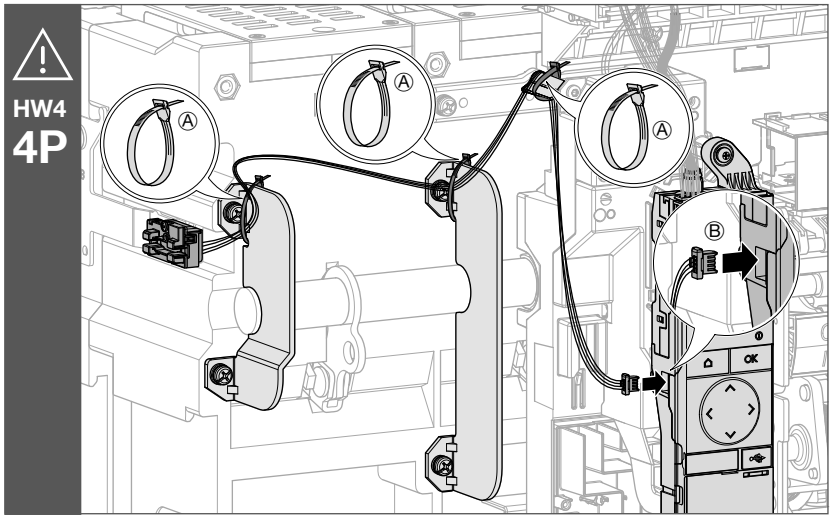
HW4
4P
A
A
B
OK

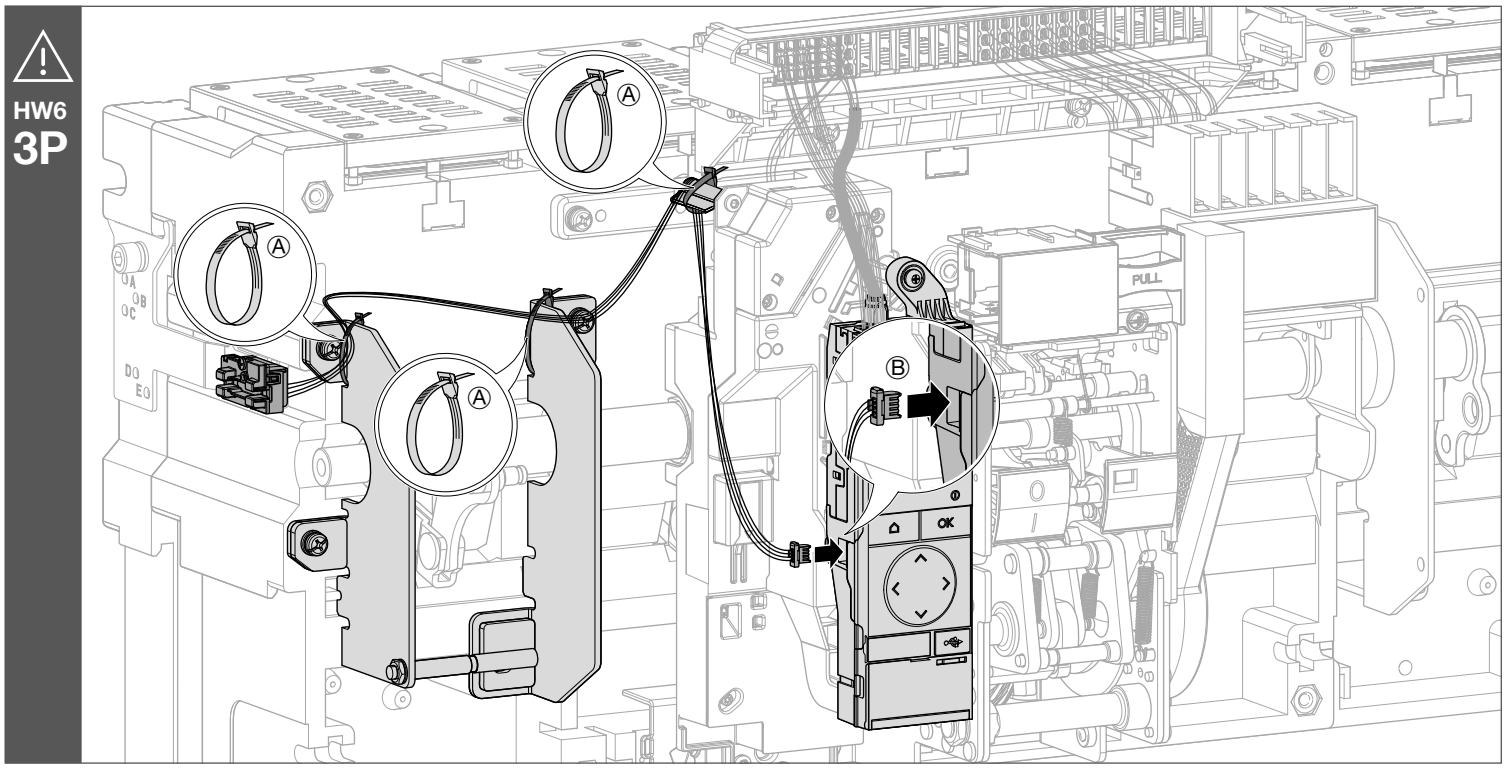
HW6
3P
A
A
A
B
PULL
OK

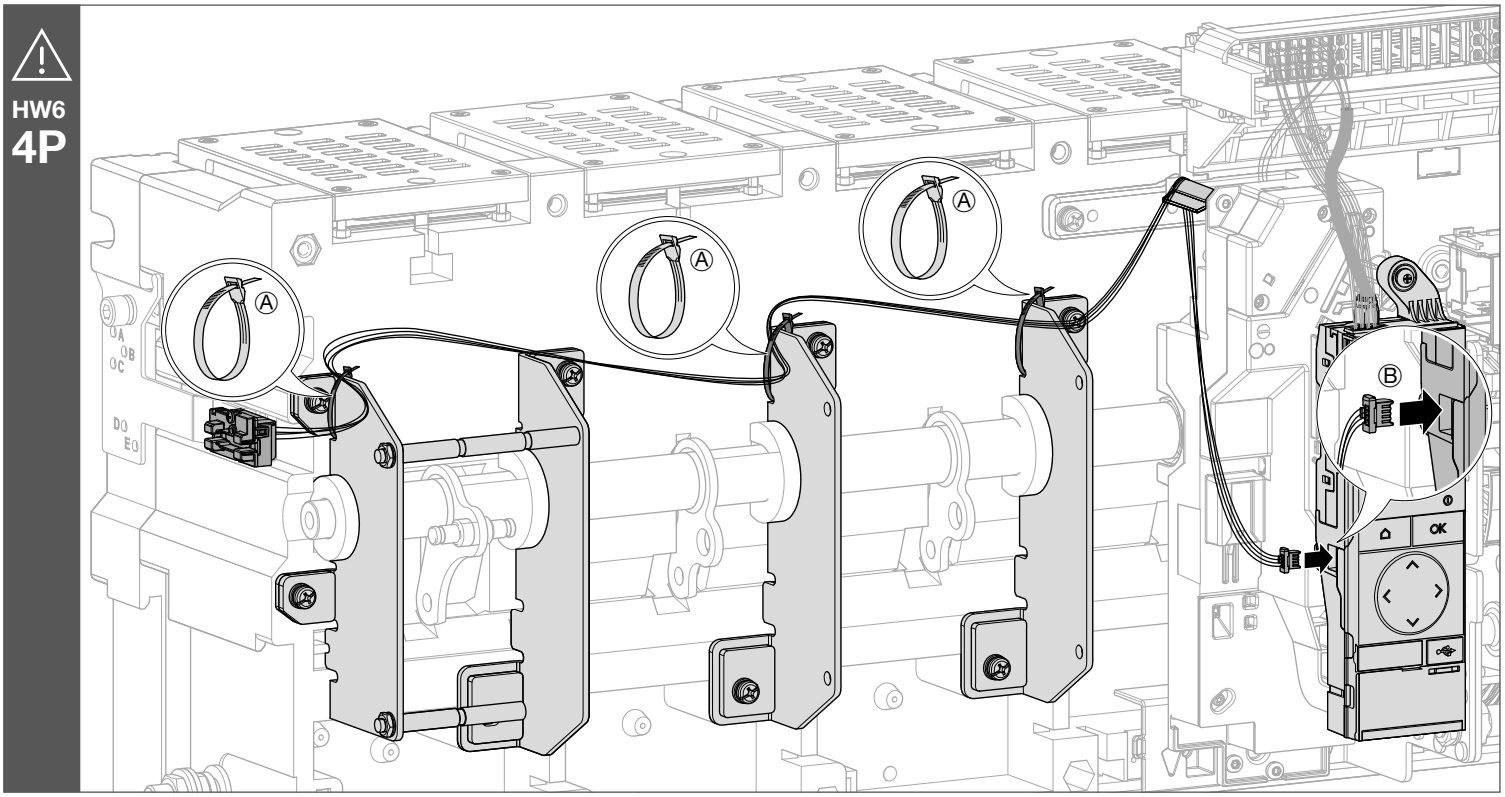
HW6
4P
A
A
A
B
OK

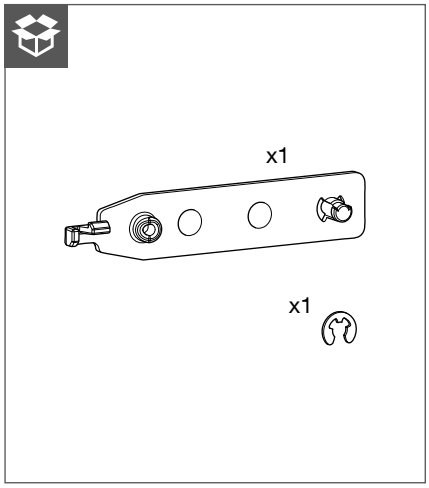

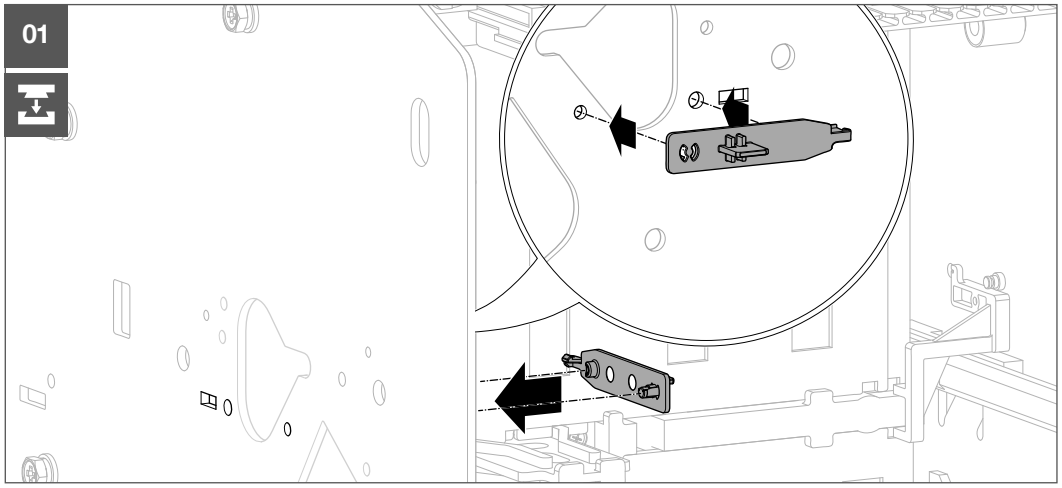

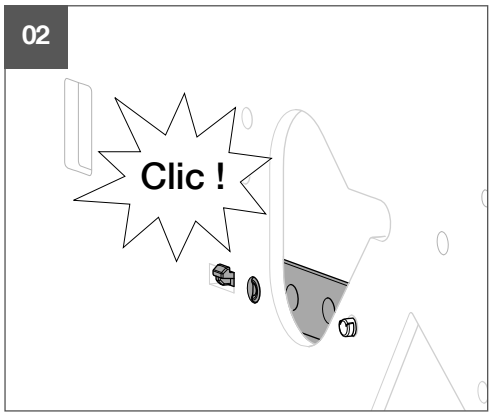

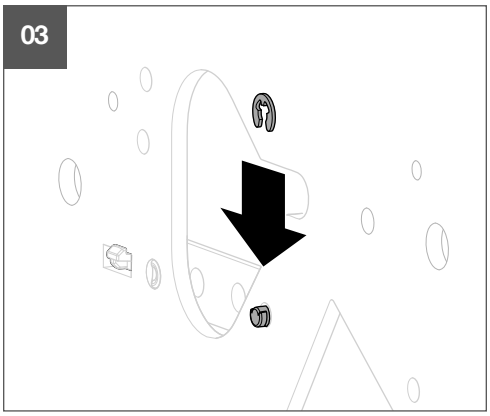

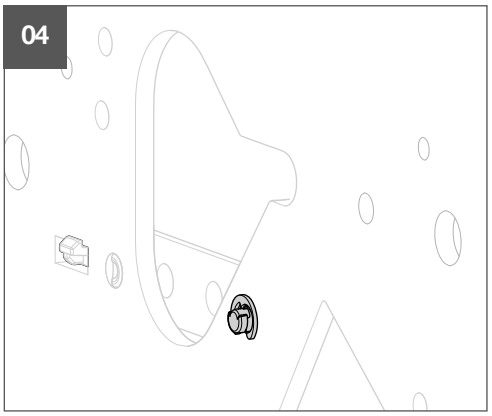

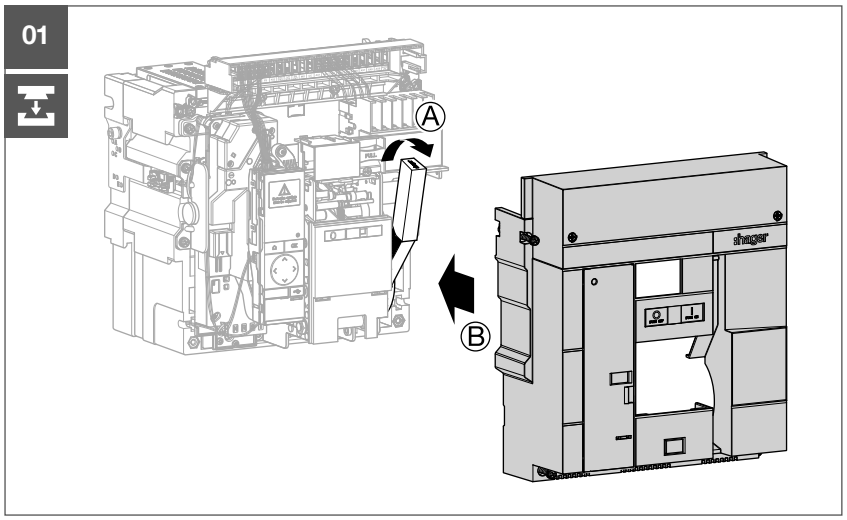

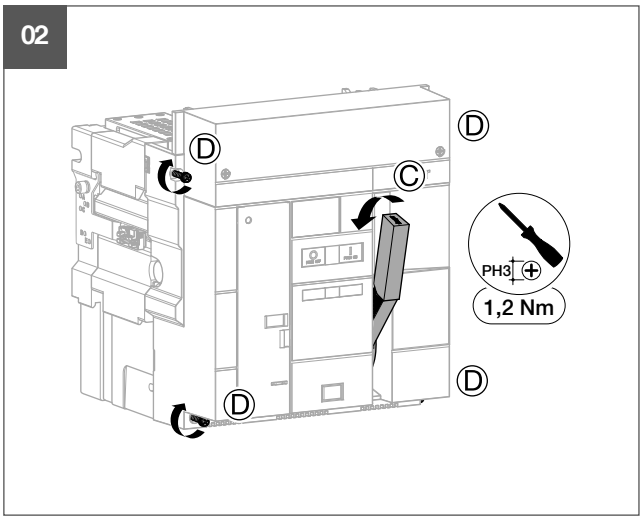

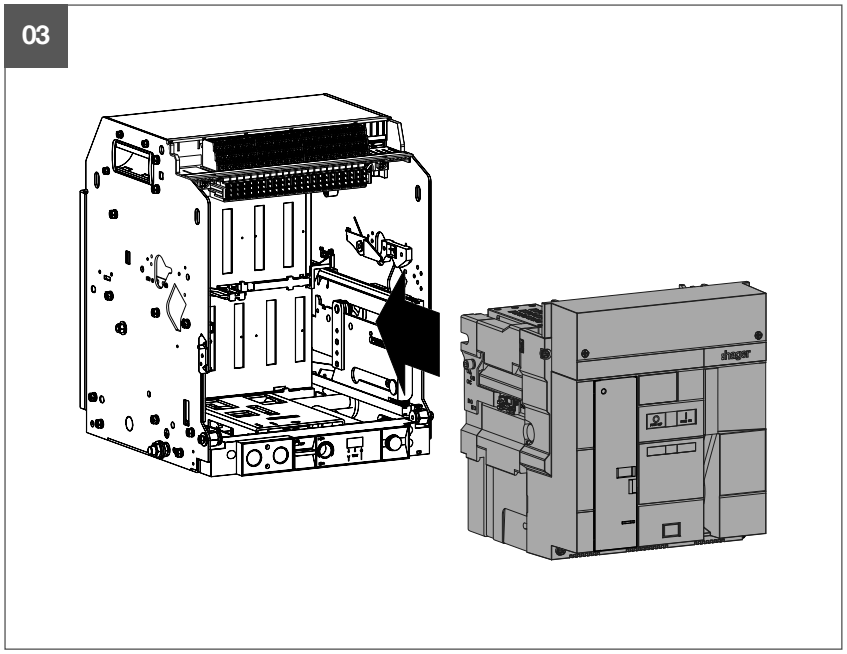

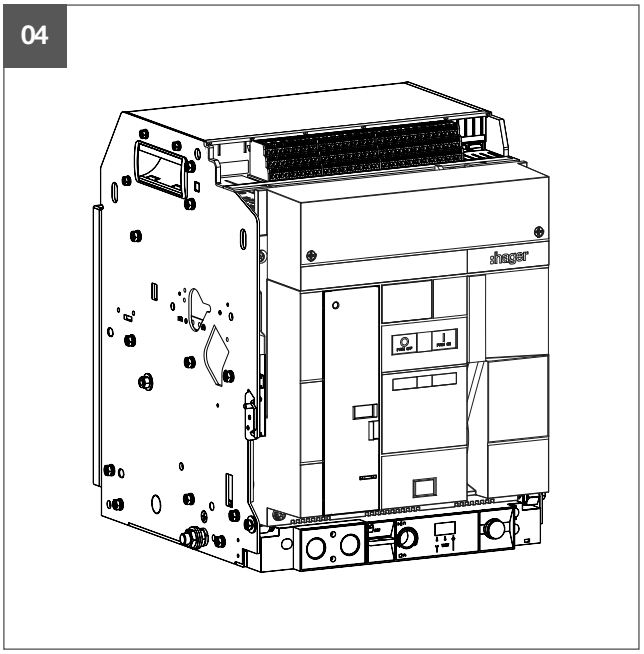

T +33 (0) 3 88 49 50 50 **F** +33 (0) 3 88 49 50 53 info@hager.com hager.com - 2025/03