User maintenance guide

hw+

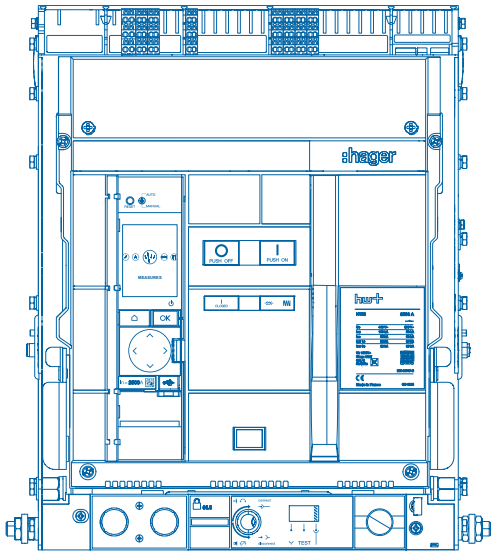

Air circuit breakers

HW2 / HW4

CE

:hager

EN

1 About this document....4

1.1 Safety instructions.... 4
1.2 Use of this document.... 6

2 Maintenance rules.... 8

2.1 Regulations.... 8
2.2 Maintenance recommendations.... 9
2.3 Safety rules.... 11
2.4 Maintenance warnings.... 13

3 Maintenance planning.... 14

4 Annual inspection....17

4.1 Check of the general condition of the circuit breaker....17
4.2 Check of the chassis mechanism.... 28
4.3 Check of the chassis and its moving part.... 45
4.4 Check of the opening and closing of the circuit breaker....51
4.5 Check of the opening and closing of the circuit breaker using coils....55
4.6 Checking the MO spring charging motor....64
4.7 Check of the TB connection terminal blocks.... 66
4.8 Checking the circuit breaker's interlock in OFF.... 75
4.9 Checking the locking of the circuit breaker position in its CL chassis.... 84
4.10 Checking the MI mechanical interlocking.... 92
4.11 Visual check of the electronic trip unit....93

5 Maintenance operations overview.... 105

5.1 Standard and Advanced preventive maintenance....105
5.2 Corrective maintenance after a short-circuit....113
5.3 Recommendations after prolonged storage....119

6 Installation or replacement of an accessory..... 122

6.1 Removal of the drawout circuit breaker..... 122
6.2 Connecting an accessory to a drawout circuit breaker..... 126
6.3 Put back in place the drawout circuit breaker..... 127
6.4 Disassembling the fixed circuit breaker..... 135
6.5 Connecting an accessory to a fixed circuit breaker..... 137
6.6 Reassembling the fixed circuit breaker..... 138
6.7 Rating plug of the electronic trip unit..... 143
6.8 Backup battery for electronic trip unit..... 153
6.9 Electronic trip unit display..... 159
6.10 TB connection terminal block..... 173
6.11 OAC Output Alarm Contact module..... 182
6.12 AX Auxiliary Contact..... 186
6.13 FS Fault trip contact..... 201
6.14 SH shunt trip coil..... 210
6.15 UV undervoltage release coil..... 219
6.16 UVTC Undervoltage Time Delay Controller..... 226
6.17 CC closing coil..... 230
6.18 MO Spring charging motor..... 238
6.19 RTC Ready-to-Close contact..... 247
6.20 ENCT External Neutral Sensor..... 256
6.21 CYC Operation Cycle Counter..... 270
6.22 PS Position contact..... 278
6.23 PBC Push-button cover..... 285
6.24 RI open-door racking interlock accessory..... 288
6.25 Accessory for locking the circuit breaker in OFF by OLK keylock..... 290
6.26 OLP Accessory for locking the circuit breaker in OFF by padlock..... 296
6.27 CL position-locking accessory to lock the circuit breaker in its chassis..... 300
6.28 WIP wrong-insertion preventer for drawout circuit breaker..... 306
6.29 DF door flange..... 310
6.30 IB interphase barriers..... 313
6.31 Communication module..... 315
6.32 INS insulation module..... 325
6.33 Panel display..... 328
6.34 Front cover..... 330

7 Optional accessories..... 335

8 Lifespan of sensitive parts..... 340

1 About this document

1.1 Safety instructions

Warnings and instructions

This documentation contains safety advice which must be respected for your own safety and to prevent property damage.
Safety instructions relating to your own safety are identified by a safety warning symbol in the documentation.
Safety instructions referring to material damage are indicated by the mention “**Notice**”.
The safety alert symbols and the statements below are classified according to the degree of risk.



Danger

DANGER indicates a situation of imminent danger which, unless averted, will result in death or serious injuries.



Warning

Warning indicates a potentially dangerous situation which, unless averted, may result in serious injuries or even death.



Caution

Caution indicates a potentially dangerous situation which, unless averted, may result in minor or moderate injuries.



Notice

Notice indicates a warning message about possible mechanical or electrical damage.



Information

Information also indicates important instructions for use and particularly relevant information regarding the product, which must be respected to ensure effective and safe use.



WHAT TO DO

WHAT TO DO describes the corrective actions to be carried out if a problem occurs while performing maintenance instructions.

Qualified personnel

The product or the system described in this documentation must be installed, operated and maintained by qualified personnel only. Hager Electro accepts no responsibility regarding the consequences of this equipment being used by unqualified personnel. Qualified personnel are those people who have the necessary skills and knowledge for building, operating and installing electrical equipment, and who have received training enabling them to identify and avoid the risks incurred.

Appropriate use of Hager products

Hager products are designed to be used only for the applications described in the catalogues and in the technical documentation relating to them. If products and components from other manufacturers are used, they must be recommended or approved by Hager.

Appropriate use of Hager products during transport, storage, installation, assembly, commissioning, operation and maintenance is required to guarantee problem-free operation in complete safety.

The permissible ambient conditions must be respected. The information contained in the technical documentation must be respected.

Publication liability

The contents of this documentation have been reviewed in order to ensure that the information is correct at the time of publication.

Hager cannot, however, guarantee the accuracy of all the information contained in this documentation. Hager assumes no responsibility for printing errors and any damage they may cause.

Hager reserves the right to make the necessary corrections and modifications to subsequent versions.

1.2 Use of this document

Purpose of the document

This guide is designed to provide users, electrical installers, panel builders and maintenance technicians the technical information necessary for replacing, installing and checking HW2 and HW4 circuit breakers with electronic trip units. It also provides the information required to plan regular maintenance operations. It also gives an overview of basic instructions and advice for carrying out various maintenance programmes (preventive, corrective after a short circuit, after prolonged storage).

Field of application

This document is applicable to the HW2 and HW4 air circuit breakers of the hw+ range.

Revisions

Version	Date
6LE009217A	2025-09

Documents to consult

Document	Reference
User Manual for hw+ sentinel electronic trip units	6LE009420A
User Manual for hw+ sentinel Energy electronic trip units	6LE009417A
Installation manual for HW2 / HW4 / HW6 air circuit breakers	6LE009367A
User manual for HW2 / HW4 / HW6 air circuit breakers	6LE009371A
sentinel Energy Modbus communication guide	6LE007964A
HTD210H panel display user guide	6LE002999A
Cybersecurity guide	6LE009346A
HW1 / HW2 / HW4 / HW6 troubleshooting guide	6LE009769A

Contact

Address	Hager Electro SAS - BP3 - 67215 OBERNAI CEDEX - FRANCE - www.hager.com
Phone	+ 33 (0)3 88 49 50 50
Website	www.hager.com

For the installation of accessories and auxiliaries, refer to the following instructions:

Accessory	Reference
TB connection terminal block	6LE009031A
Terminal block protection cover	6LE007885A
OAC Output Alarm Contact module	6LE009032A
AX Auxiliary Contact	6LE007866A
FS Fault trip contact	6LE009028A
SH shunt trip coil	6LE009029A
UV undervoltage release coil	6LE009029A
UVTC Undervoltage Time Delay Controller	6LE007626A
CC closing coil	6LE009029A
MO Spring charging motor	6LE007865A
RTC Ready-to-Close contact	6LE007867A
External neutral current sensor ENCT HW2	6LE007879A
External neutral current sensor ENCT HW4	6LE009124A
CYC Operation Cycle Counter	6LE007868A
PS Position contact	6LE009030A
PBC Push-button cover	6LE007871A
RI Open-door racking interlock accessory	6LE007874A
Accessory for locking the circuit breaker in OFF by OLK keylock	6LE007875A
OLP Accessory for locking the circuit breaker in OFF by padlock	6LE007876A
CL position-locking accessory to lock the circuit breaker in its chassis	6LE007877A
WIP wrong-insertion preventer for drawout circuit breaker	6LE007878A
HW2 DF Door flange	6LE007882A
HW4 DF Door flange	6LE009126A
IB interphase barriers	6LE007870A
Communication module	6LE009015A
INS insulation module	6LE008004A
Panel display	6LE002999A

You can download these publications and other technical information from our website:
www.hager.com

2 Maintenance rules

2.1 Regulations

The IEC 60364-6 standard specifies the requirements for initial and periodic examination of a low-voltage electrical installation.

In particular, paragraph 6.5.1.5 stipulates that periodic examination and maintenance of the installations must be performed by a person who is qualified and skilled in the verification field.

It is also stipulated that the frequency of the periodic examination of an installation must be determined by taking into account the type of installation and equipment, its use and operation, the quality of the maintenance and the external influences to which it is subject.

It is further stipulated that a report should be drawn up after verification and that it should include the following information:

- details of the parts of the installation examined,
- any limitations of the examination and tests
- any damage, deterioration, faults or dangerous conditions,
- any non-conformity with requirements that may create danger
- the list of tests performed,
- the list of the results of appropriate tests detailed in 6.4.3.

The requirements of IEC 60364-6 are translated into local standard and, if appropriate, reference should be made to these texts. For example in Germany this is DIN VDE 0105-100, in France NFC 15100 Title 6, part 6-62, in the Netherlands NEN 3140 and in Switzerland 95 CH 734.2.

The qualification requirements and safety rules of the conditions of operation are specified at the national level in each country. In France, for example, the UTE C 18-510 ‘Compendium of general electrical safety instructions’ guide indicates the safety conditions in which maintenance operations should be performed (see Chapter 2.3, Safety rules for our recommendations).

Depending on the country, the regulations and local laws may make periodic maintenance examination recommended or mandatory and may also define the maximum interval between two periodic examination . This is the case in Germany, where they are made mandatory by the law EnWG, DGUV V3, the order “Betriebssicherheitsverordnung” (BetrSichV), the standards DIN VDE 0100-600 and DIN VDE 0701-0702.

2.2 Maintenance recommendations

The lifespan of HW2 and HW4 switch disconnectors and circuit breakers depends on environmental and operating conditions. They are exposed to environmental, thermal, mechanical and electrical stresses, which causes them to undergo progressive deterioration while they are being used, raising the possibility of failure. To avoid functional degradation, to provide warnings of any failure, to prolong the lifespan and to guarantee the operational safety of your electrical installation, Hager recommends performing regular and appropriate maintenance of the HW2 and HW4 circuit breakers and switch disconnectors, in accordance with the IEC 60364-6 standard, which requires initial and periodic verifications of electrical installations.

We differentiate 3 types of maintenance:

- corrective maintenance after a short-circuit,
- preventive maintenance,
- the annual inspection.

Corrective maintenance after a short-circuit

This is necessary after any trip caused by a short-circuit fault. The maintenance indicator will appear on the screen and can only be reset after corrective maintenance has taken place. It includes performing visual checks, tests, measurements and any maintenance or repair activity, as well as the replacement of any faulty parts.

Preventive maintenance

Hager recommends two preventive maintenance programmes.
Standard preventive maintenance: intended to preserve the operational safety of the circuit breaker while maintaining a consistent level of quality. It includes performing test, measurements and any maintenance or repair activity, as well as the replacement of any faulty parts. During the first meeting it is important to determine the actual operation conditions of the circuit breaker and its operating state in order to plan and carry out regular maintenance in agreement with the customer, for example every 2 years.
Advanced preventive maintenance: intended to restore the circuit breaker to an almost new state in order to prolong its lifespan. It can be carried out during planned maintenance, in agreement with the customer, regardless of the actual state of the circuit breaker or any previous faults it may have had. It is particularly useful after years of operation, particularly for parts that have been subject to strong wear and tear. The latter are replaced on a preventive basis, before an irreversible breakdown or complete destruction of the circuit breaker occurs, for example if the chassis jaw contacts already show strong wear and tear.

Annual inspection

The aim of this inspection is to verify that the circuit breakers are operating correctly, to detect wear and tear on time or to do a check one year after the operating conditions have changed, such as an increase in the electrical load or an increase in the operating cycles. The annual inspection completes the preventive maintenance. It is described in this guide (see Chapter 4, Annual inspection . All of the checks mentioned are non-mandatory and should be applied according to the configuration of the circuit breaker and the accessories installed.

Maintenance schedule

The maintenance schedule sets the appropriate frequency for the interventions and the maintenance schedule to be applied. It must be defined according to the type of installation and equipment, their use and operation, the quality of maintenance and the external influences to which the installation is subjected. The environmental and operating conditions of the HW2 and HW4 devices are described in chapter 3 "Maintenance planning".

This guide describes annual inspection, preventive and corrective maintenance operations for information. It in no way constitutes a manual for training in how to carry out these maintenance operations.

2.3 Safety rules

Read the following instructions carefully and make sure to follow them when carrying out the operations described in this guide.

Safety instructions for installation or accessory replacement operations



Danger

Risk of electric shock, electrocution or electric arc

Installation or accessory replacement operations should only be performed by staff qualified to install this device.

Before installing or replacing any accessory, follow the procedures described in Chapter 6 "Installation or replacement of an accessory" as well as the manuals mentioned.

Wear appropriate personal protective equipment and follow the electrical safety regulations in force in your country.

Before starting any operation, check to ensure that all electrical power to the equipment has been disconnected and that it remains off for the duration of all the operations.

Follow the five safety rules below:

- Disconnect all electrical power supplies to the device, taking into account all the main, backup and control power sources,
- Disconnect and appropriately identify any power sources in such a way as to prevent their reconnection,
- Check that there is no voltage on the device,
- Earth all the circuits of the equipment,
- Provide protection against the adjacent parts that are still powered.

Verify that no tools or objects have been left inside the device.

Perform an insulation measurement with a megohmmeter or a Fluke device (500V DC to 1000V DC).

Replace all devices, doors and covers before powering up the device.

Qualified personnel

Qualified personnel are those people who have the necessary skills and knowledge for building, operating and installing electrical equipment, and who have received training enabling them to identify and avoid the electrical risks incurred and to apply the safety rules in force in the country. They must also be recognised as persons qualified to work on electrical installations, according to the regulations in force in the country.

Safety instructions for maintenance operations



Danger

Risk of electric shock, electrocution or electric arc

Maintenance operations must be performed only by duly qualified and authorised staff who have undergone in-depth training in the maintenance of Hager devices.

Wear appropriate personal protective equipment and follow the electrical safety regulations in force in your country.

Before starting any operation, check to ensure that all electrical power to the equipment has been disconnected and that it remains off for the duration of all the operations.

Follow the five safety rules below:

- Disconnect all electrical power supplies to the device, taking into account all the main, backup and control power sources,
- Disconnect and appropriately identify any power sources in such a way as to prevent their reconnection,
- Check that there is no voltage on the device,
- Earth all the circuits of the equipment,
- Provide protection against the adjacent parts that are still powered.

Follow all instructions and lessons given during the in-depth training on maintenance of Hager devices.

Carefully inspect the work area and verify that no tools or objects have been left inside the device.

Perform an insulation measurement with a megohmmeter or a Fluke device (500V DC to 1000V DC).

Replace all devices, doors and covers before powering up the device.

Qualified and authorised staff

Qualified and authorised staff means staff who are familiar with the mounting, installation, commissioning and operation of Hager devices and who have followed in-depth training on the maintenance of Hager devices.
These persons must have followed training allowing them to identify and avoid the electrical risks incurred and to apply the safety regulations in force in the country. They must also be recognised as persons qualified to work on electrical installations, according to the regulations in force in the country.

2.4 Maintenance warnings

The need for maintenance is signalled on the trip unit display by a maintenance alarm or indicator.

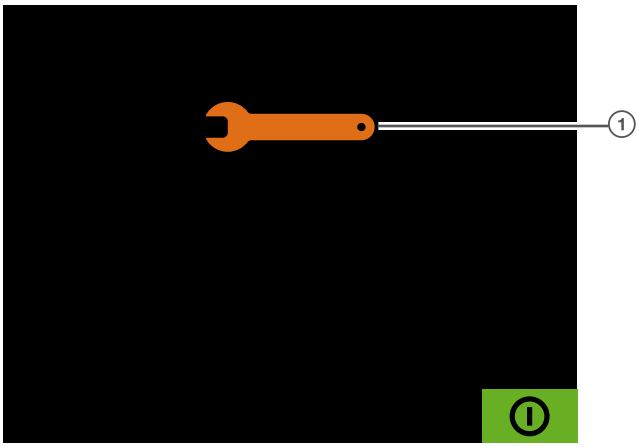

Fig. 1: sentinel trip unit

1 Maintenance indicator

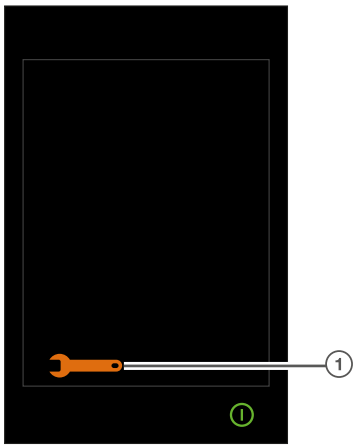

Fig. 2: sentinel Energy trip unit

1 Maintenance indicator

By default it flashes:

- at the end of 5 years of operation,
- after 3,000 cycles of opening/closing,
- after any tripping on STD Short Time Delay Protection or INST/MCR Instantaneous protection.

When the maintenance alarm or indicator appears, it is essential to perform the appropriate maintenance as soon as possible according to what the cause of the alarm is and the maintenance program described in the maintenance schedule.

The appearance of the maintenance alarm or indicator has no impact on the operation of the hw+ circuit breaker and all displays of the trip unit display remain accessible.

At the end of commissioning or any maintenance operation, the maintenance alarm must be reprogrammed or reset only by the persons responsible for maintenance or authorised by Hager or who have undergone Hager training.

3 Maintenance planning

Regular maintenance helps avoid functional degradation, provide warnings of failures, prolong the lifespan and guarantee the operational safety of HW2 and HW4 devices.

Hager recommends drawing up a schedule that sets the appropriate frequency as well as the standard or advanced level for maintenance programmes. This planning is dependent on the environmental conditions and the usage conditions of the HW2 and HW4 devices.

It must be defined in accordance with the criteria intended to qualify the environmental conditions and usage conditions of HW2 and HW4 devices.

The main criteria are:

- the temperature,
- relative humidity,
- dust,
- corrosive atmosphere,
- saline atmosphere,
- vibration levels,
- load rate,
- the number of electrical operations.

Other factors may be taken into account on an empirical basis.

Three levels of environmental and usage conditions are proposed.

Favourable environmental and usage conditions or protected device

Temperature	Average ambient daily temperature outside the distribution board < 25 °C (in normal conditions of service in accordance with the IEC 61439-1 standard). The appliance is installed in an air-conditioned room or in a ventilated cabinet.
Relative humidity	< 50%
Dust	Negligible. The device is protected in a switchboard fitted with filters or ventilated IP54. IEC 60721-3-3 level 3S1
Corrosive atmosphere	The appliance is installed in an environment category 3C1 or in a protected room (air-conditioned and purified).
Saline atmosphere	Without device installation
Vibrations	Without device installation
Load rate	The load factor remains < 50% of In whether 8 hours a day or 24 hours a day
Number of annual opening/closing cycles	< 50 cycles

Normal environmental and usage conditions

Temperature	Average ambient daily temperature outside the distribution board < 25 °C (in normal conditions of service in accordance with the IEC 61439-1 standard).
Relative humidity	< 70%
Dust	Low. The device is protected in a switchboard fitted with filters or ventilated IP54. IEC 60721-3-3 level 3S1
Corrosive atmosphere	The device is installed in an environment category 3C1 or 3C2 (IEC 60721-3-3)
Saline atmosphere	Without device installation
Vibrations	Permanent vibrations are < 0.2 g
Load rate	The charge rate are still < 80% of In 24h/24h. The harmonic current per phase is < 30%. of In.
Number of annual opening/closing cycles	From 50 to 1000 cycles

Severe environmental and usage conditions

Temperature	Average ambient daily temperature outside the distribution board between 35 and 45°C (in normal operating conditions in accordance with the IEC 61439-1 standard).
Relative humidity	> 80%
Dust	High. The device is unprotected. IEC 60721-3-3 level 3S2
Corrosive atmosphere	The device is installed in an environment category 3C3 or 3C4 with no special protection.
Saline atmosphere	Installation < 10 km from the seaside and the device has no specific protection
Vibrations	Permanent vibrations are between 0.2 and 0.5 g
Load rate	The load factor remains > 80% of In whether 8 hours a day or 24 hours a day
Number of annual opening/closing cycles	> 1000 cycles

According to the environmental and usage conditions, the following schedule may be used.

Maintenance schedule

Installation and operating conditions	Year of operation																			
	1	2	3	4	5	6	7	8	9	10	11	12	13	14	15	16	17	18	19	20
Favourable				S		A			S		A		S		A		S		A	
Normal			S		A			S		A		S		A		S		A		S
Severe		S		A		S		A		S	A	S	A	S	A	S	A	S	A	S

S: Standard preventive maintenance

A: Advanced preventive maintenance

This schedule is indicative and should be adapted to the real use of the installation. In the case of use where for example the circuit breaker undergoes several opening/closing cycles per day, the maintenance frequency can be reduced to every 6 months.
The customer must plan its schedule with the help of the maintenance provider, taking into account local regulations, its needs and its environment.

4 Annual inspection

The verifications described in this chapter are given on an illustrative basis to provide an overview of the annual inspection operations.
The contents of this chapter are not sufficient to perform these verifications.
To be able to perform this annual inspection, it is recommended that training in hw+ circuit breaker maintenance be undertaken.

4.1 Check of the general condition of the circuit breaker

1 Missing parts

The circuit breaker must be in the following preliminary conditions:

Circuit breaker	Contacts	Closing spring	Position of the circuit breaker in the chassis
Fixed	Open	Discharged	-
Withdrawable	Open	Discharged	Disconnected

Danger

Risk of electric shock, electrocution or electric arc.

Ensure that the electrical board is voltfree and logged.

Verify that the circuit breaker and the chassis are not powered on the upstream or downstream terminals by using an appropriate voltage detection device.

	Action	Illustration
1	Verify that none of the screws is missing on the front cover (4 screws for the 3-pole circuit breakers, 6 screws for the 4-pole circuit breakers).	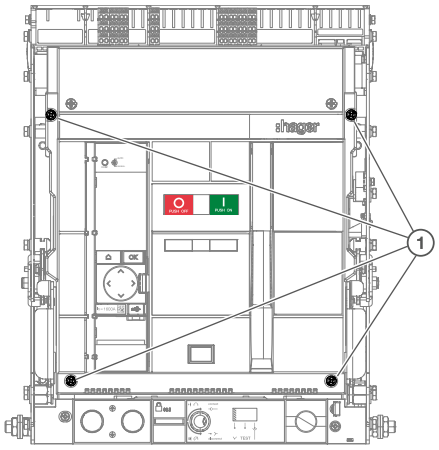

	Action	Illustration
		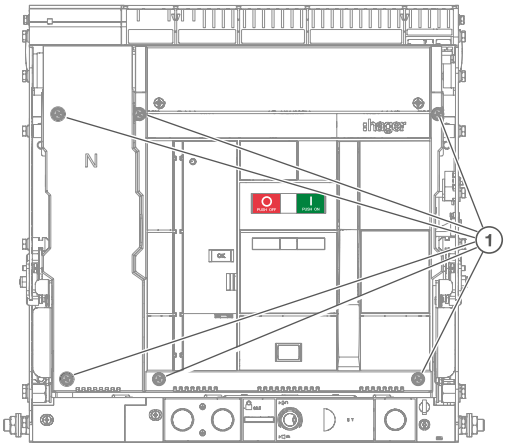 (1) Screws to be checked

WHAT TO DO

If one of the screws is missing, contact your Hager representative or local technical support (contact details can be found on the Hager website for your country).

	Action	Illustration
2	Verify that the front cover is not damaged.	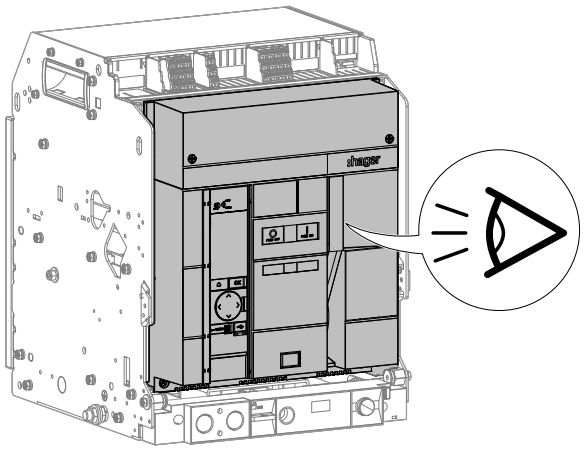

WHAT TO DO

If the front cover is damaged, contact your Hager representative or local Hager technical support (contact details for your country can be found on the Hager website).

	Action	Illustration
3	Verify that the cover of the neutral pole is not damaged.	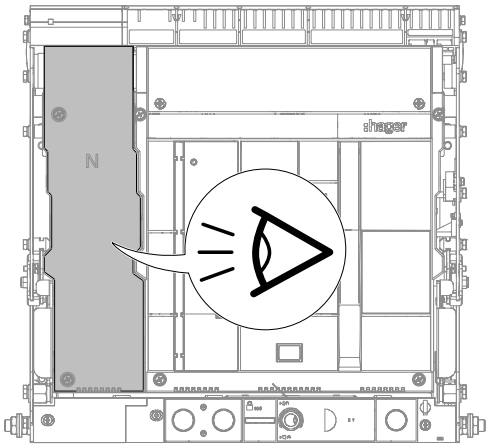

WHAT TO DO

If the neutral pole cover is damaged, contact your Hager representative or local Hager technical support (contact details can be found on the Hager website for your country).

	Action	Illustration
4	Verify that the opening and closing push buttons for the contacts and the status indicators for the closing spring and contacts are in good condition.	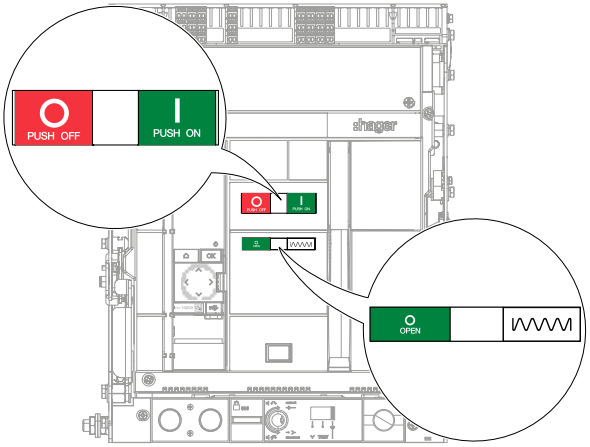

WHAT TO DO

If the opening and closing push buttons for the contacts or the status indicators are damaged, contact your Hager representative or local Hager technical support (contact details for your country can be found on the Hager website).

	Action	Illustration
5	Verify that the arming handle is in good condition. Verify that it is in its normal position after being manipulated.	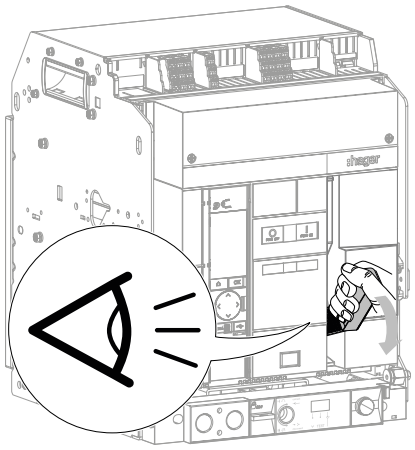

WHAT TO DO

If the arming handle is damaged, contact your Hager representative or local Hager technical support (contact details can be found on the Hager website for your country).

	Action	Illustration
6	Verify that the transparent cover is present and in good condition.	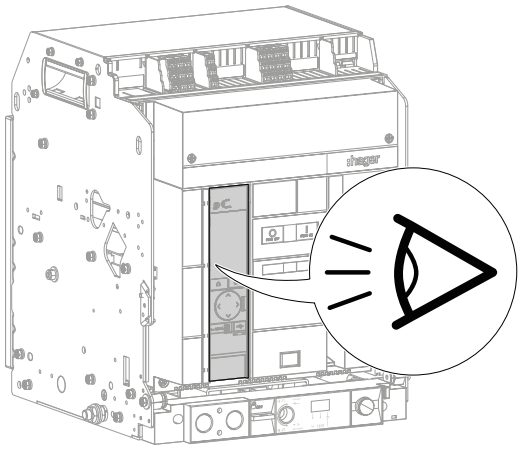

WHAT TO DO

If the transparent cover is damaged, contact your Hager representative or local Hager technical support (contact details for your country can be found on the Hager website).

	Action	Illustration
7	Verify that the circuit breaker's technical specification and identification labels are present.	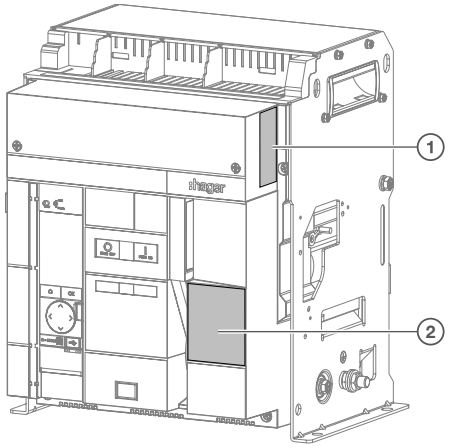 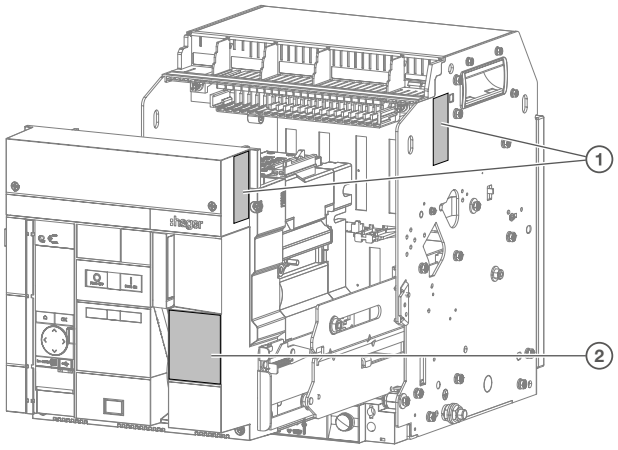 ① Identification label on the circuit breaker or the chassis ② Circuit breaker type plate

WHAT TO DO

If a label is damaged and no longer legible, contact your Hager representative or local technical support (contact details for your country can be found on the Hager website).

❷ Visible signs of damage or wear on a fixed circuit breaker

The circuit breaker must be in the following preliminary conditions:

Circuit breaker	Contacts	Closing spring	Position of the circuit breaker in the chassis
Fixed	Open	Discharged	-

	Action	Illustration
1	Check the circuit breaker for signs of black smoke symptomatic of tripping due to a short circuit, cracks, colour change indicating abnormal temperature rise, or other damage.	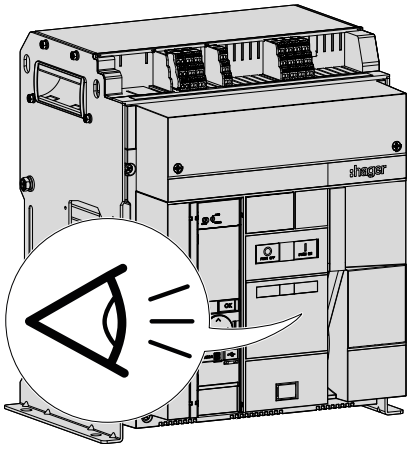

WHAT TO DO

If the circuit breaker shows cracks, signs of deformation, or if colour changes are detected, a complete inspection of the circuit breaker and cabinet is required. Carry out all the checks described in chapter "Corrective maintenance after a short-circuit".

	Action	Illustration
2	Check the connection bars for signs of discolouration, deformation or any other damage that could affect their integrity.	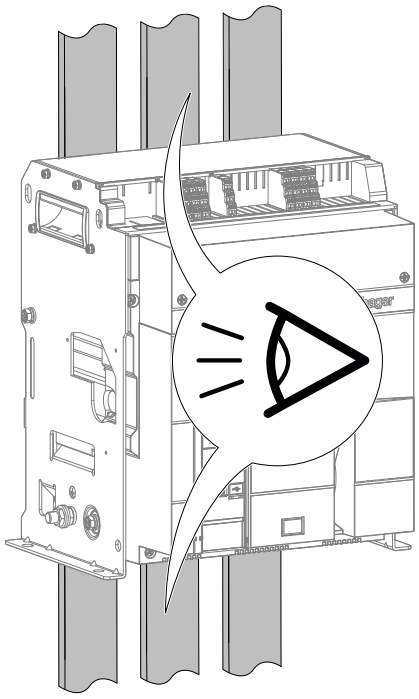

WHAT TO DO

If the connecting bars show any damage, inform the customer.

	Action	Illustration
3	Verify that no dust has accumulated outside the circuit breaker. If it has, use a vacuum to remove it.	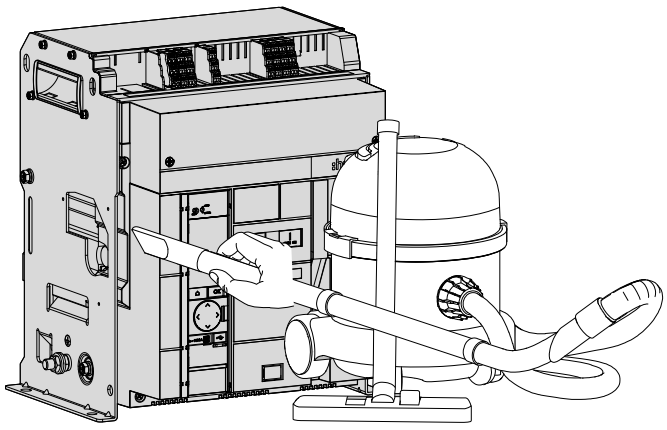

Notice

Risk of mechanical damage.

Do not use a compressed air cleaner because it risks dispersing dust into the circuit breaker.

Notice

Risk of mechanical damage.

To avoid electric shock, only use a vacuum cleaner whose housing is made from non-conductive materials.

	Action	Illustration
4	Clean the moving part using a clean, dry cloth and VZ404 detergent for plastic surfaces. For more stubborn dirt, use Fuchs Solvert 70 brake cleaner.	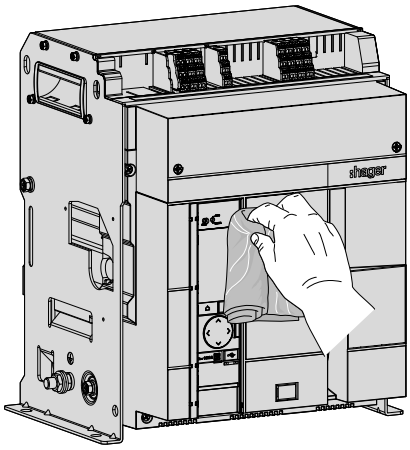

Notice

Risk of mechanical damage.

Do not use solvent-based products to clean the circuit breaker (except brake cleaner).

❸ Visible signs of damage or wear on a drawout circuit breaker

The circuit breaker must be in the following preliminary conditions:

Circuit breaker	Contacts	Closing spring	Position of the circuit breaker in the chassis
Withdrawable	Open	Discharged	Disconnected

	Action	Illustration
1	Check the circuit breaker for any traces of black smoke that would result in tripping due to a short circuit, cracks, colour change indicating an abnormal temperature rise, or other damage.	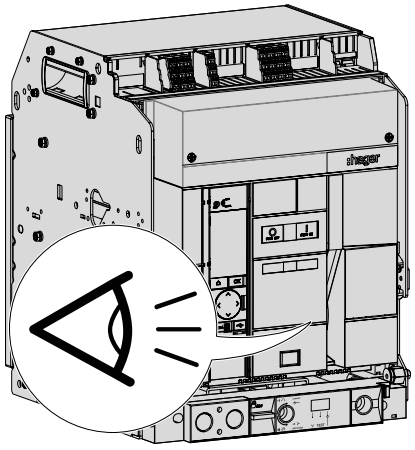

WHAT TO DO

If the circuit breaker shows cracks, deformation, or colour changes, a full inspection is required to determine if the circuit breaker needs to be replaced. Record any faults found in the Service Report.

	Action	Illustration
2	Check the connection bars for signs of colour change, deformation, or any other damage that could affect their integrity.	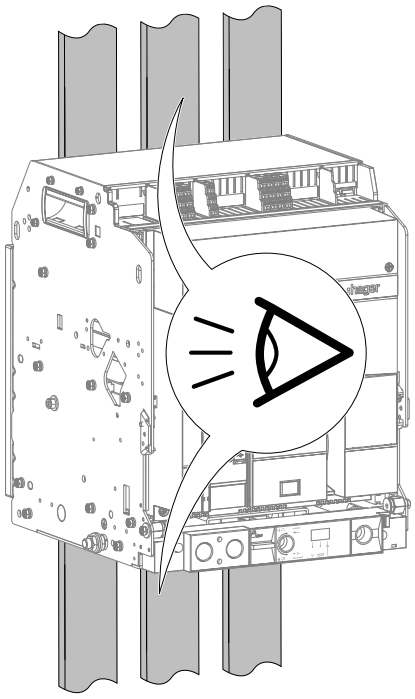

WHAT TO DO

If the connecting bars show any damage, inform the customer.

	Action	Illustration
3	Verify that no dust has accumulated outside the circuit breaker. If it has, use a vacuum to remove it.	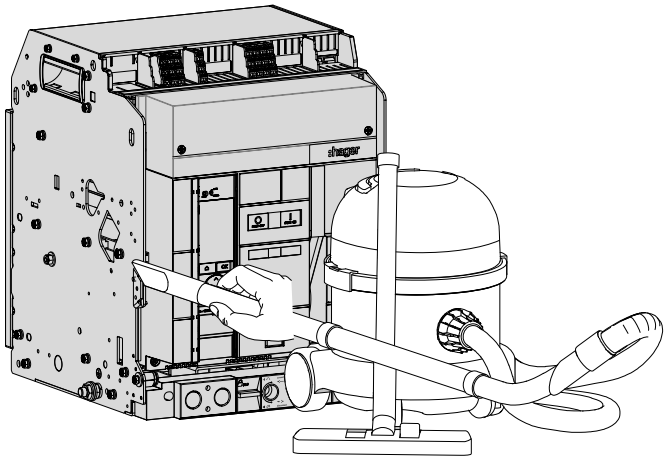

Notice

Risk of mechanical damage.

Do not use a compressed air cleaner because it risks dispersing dust into the circuit breaker.



Notice

Risk of mechanical damage.

To avoid electric shock, only use a vacuum cleaner whose housing is made from non-conductive materials.

4.2 Check of the chassis mechanism

The circuit breaker must be in the following preliminary conditions:

Circuit breaker	Contacts	Closing spring	Position of the circuit breaker in the chassis
Withdrawable	Closed	Charged	Connected

❶ Moving from the Connected position to the Test position

	Action	Illustration
1	Verify that the circuit breaker is closed, the closing spring charged and the mechanical position indicator signals that it is in the Connected position.	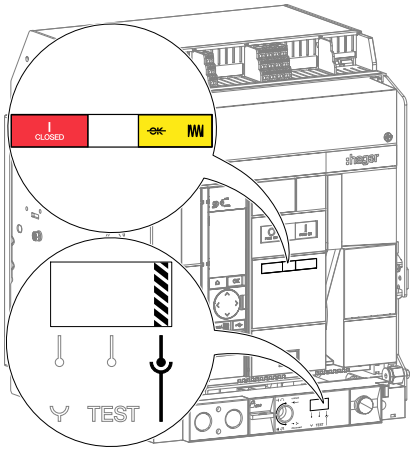
2	Remove the racking handle from its place.	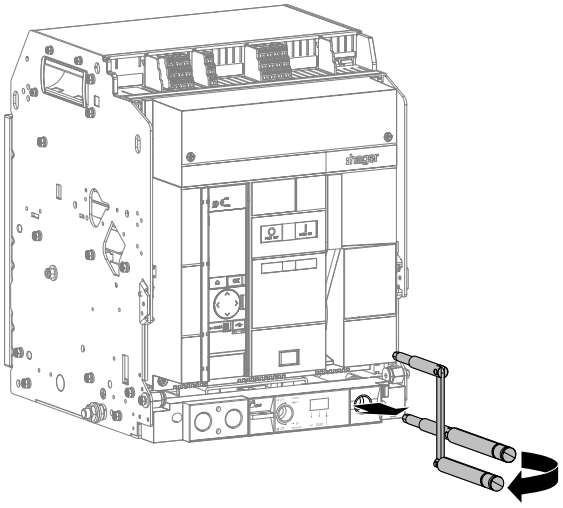

	Action	Illustration
3	Insert the racking handle into the racking-in/racking-out hole.	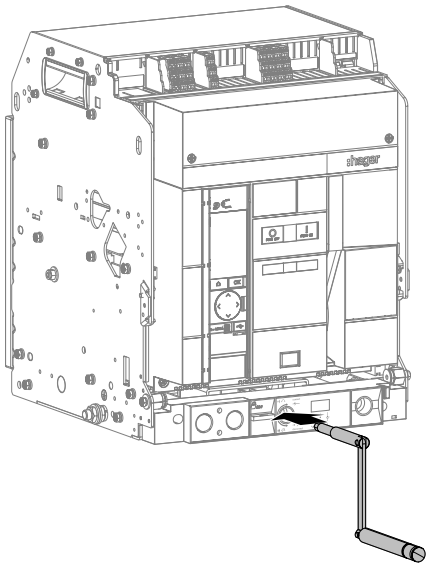

WHAT TO DO

If the racking handle cannot be inserted into the racking-in/racking-out hole, refer to the 6LE009769A Troubleshooting manual.

If the problem persists, contact your Hager representative or local Hager technical support (contact details can be found on the Hager website for your country).

	Action	Illustration
4	Press the padlocking and position acknowledgement tab.	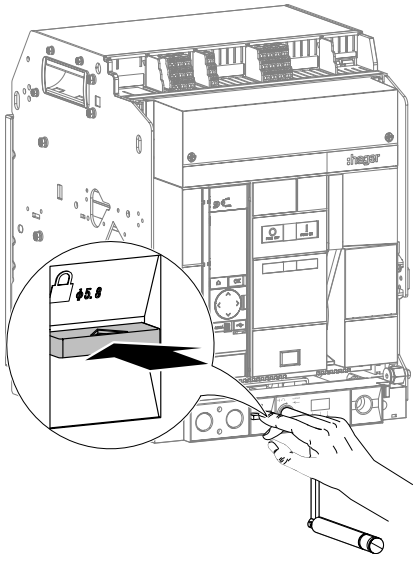

	Action	Illustration
5	Turn the racking handle anti-clockwise for one turn.	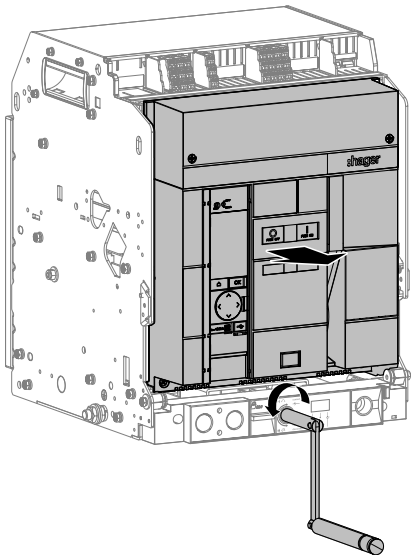

WHAT TO DO

If the racking handle cannot be turned, ensure that the padlocking and position acknowledgement tab is properly pressed in.

	Action	Illustration
6	Continue to turn, verifying that the circuit breaker opens and that the status indicators signal that it is open.	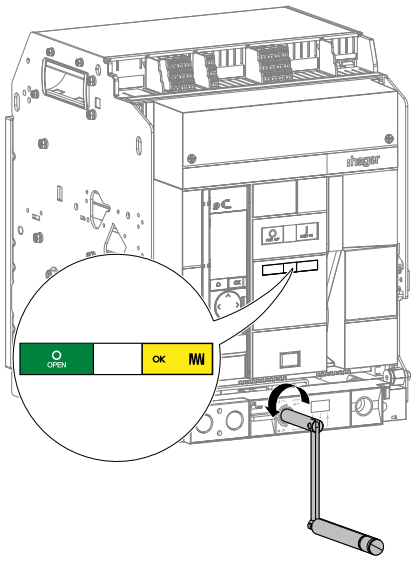

WHAT TO DO

If the circuit breaker does not open or if the status indicators signal incorrectly, contact your Hager representative or local Hager technical support (contact details for your country can be found on the Hager website).

	Action	Illustration
7	Turn the racking handle anti-clockwise again until the circuit breaker is in the Test position, the racking handle blocks,	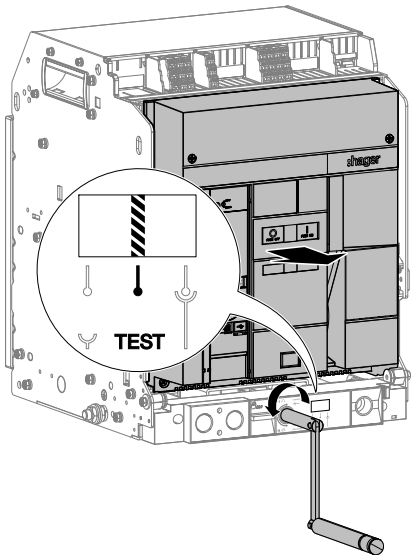
	and the padlocking and position acknowledgement tab comes out of its housing.	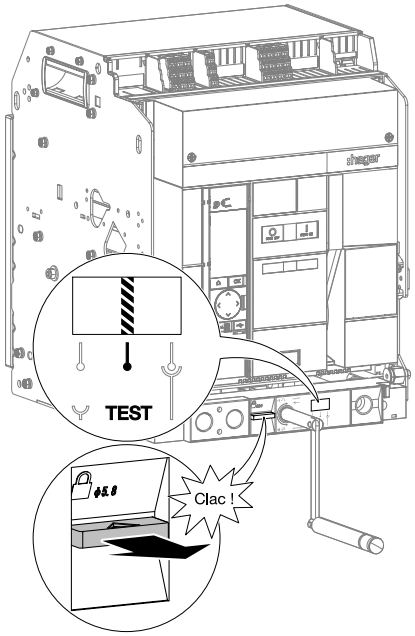
	Verify that the mechanical position indicator signals that the circuit breaker is in the Test position.	

WHAT TO DO

If the racking handle does not block in the Test position, if the mechanical position indicator signals incorrectly, or if the padlocking and position acknowledgement tab does not come out of its housing, contact your Hager representative or local Hager technical support (contact details for your country can be found on the Hager website).

❷ Moving from the Test position to the Disconnected position

	Action	Illustration
1	Verify that the mechanical position indicator signals that the circuit breaker is in the Test position.	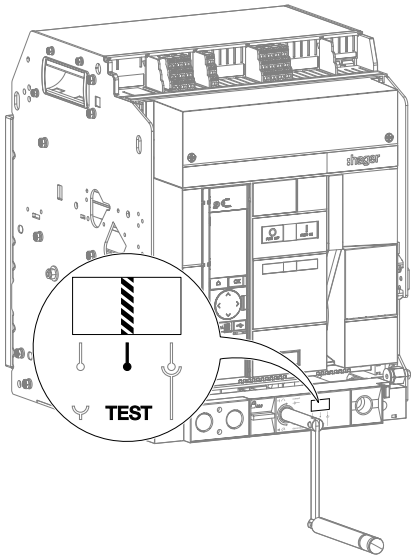
2	Press the padlocking and position acknowledgement tab.	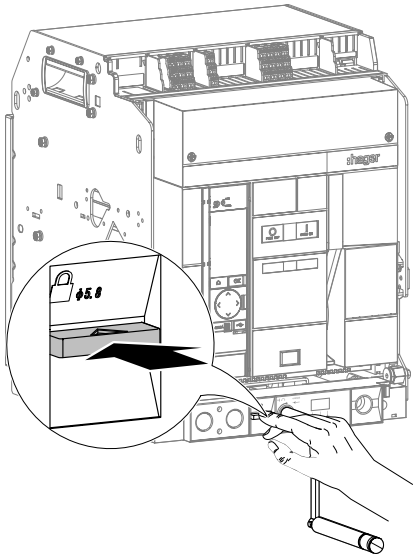

	Action	Illustration
3	Turn the racking handle anti-clockwise until the circuit breaker is in the Disconnected position, the racking handle blocks,	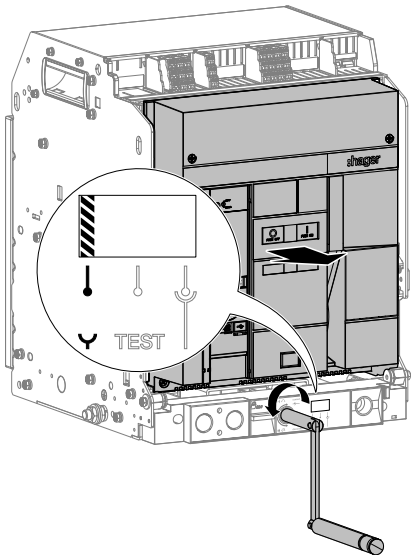
	and the padlocking and position acknowledgement tab comes out of its housing.	
	Verify that the mechanical position indicator signals that the circuit breaker is in the Disconnected position.	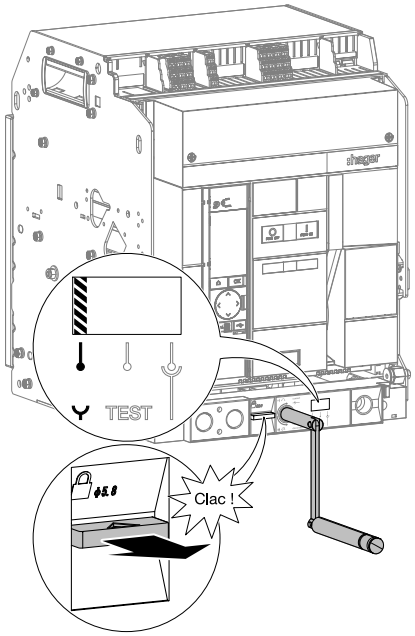

WHAT TO DO

- **If the racking handle cannot be turned,** ensure that the padlocking and position acknowledgement tab is properly pressed in. If the problem persists, contact your Hager representative or local Hager technical support (contact details can be found on the Hager website for your country).
- **If the racking handle does not block in the Disconnected position, if the mechanical position indicator signals incorrectly, or if the padlocking and position acknowledgement tab does not come out of its housing,** contact your Hager representative or local Hager technical support (contact details can be found on the Hager website for your country).

	Action	Illustration
4	Remove the racking handle from the racking-in/racking-out hole and place it in its housing. While pressing the toggles,...	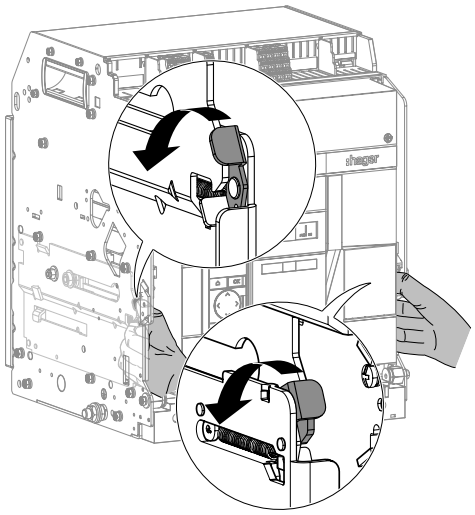
	pull the handles to take the circuit breaker out of its holder.	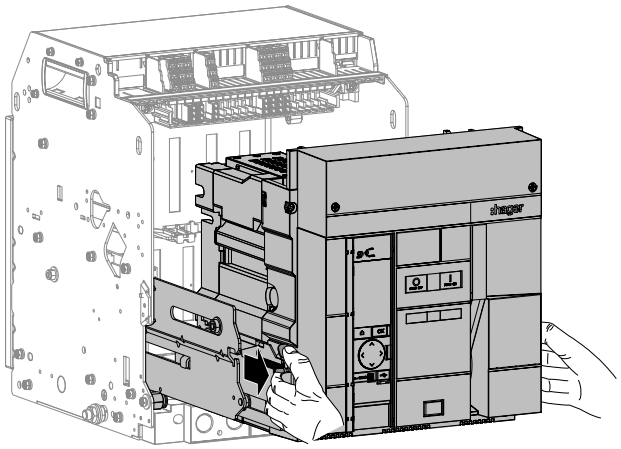
5	Push the circuit breaker to the back of the chassis without pushing on the guide rails. Ensure that it is fully engaged in the chassis.	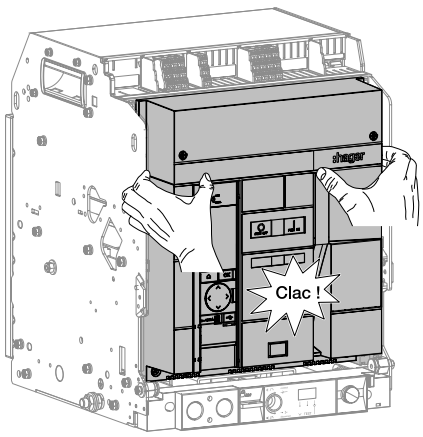

	Action	Illustration
6	Verify that the guide rails are correctly positioned.	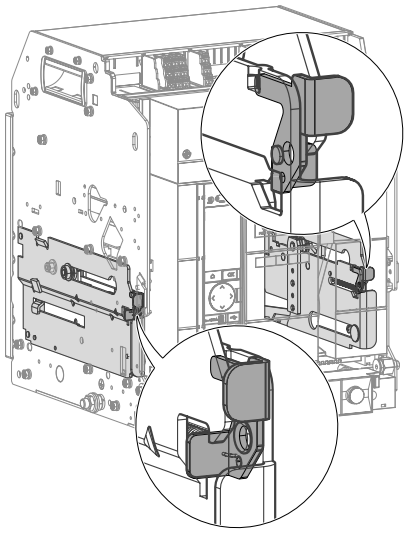

WHAT TO DO

If the circuit breaker cannot be fully pushed to the back of the chassis:

- pull the circuit breaker completely out of the chassis,
- push the circuit breaker to the back of the chassis carefully while ensuring that the circuit breaker's jaw contacts are properly inserted into the contact clamps,
- ensure that the front of the circuit breaker is aligned with the front of the chassis.

If the problem persists, contact your Hager representative or local Hager technical support (contact details can be found on the Hager website for your country).

❸ Moving from the Disconnected position to the Test position

	Action	Illustration
1	Verify that the mechanical position indicator signals that the circuit breaker is in the Disconnected position. Insert the racking handle into the racking-in/racking-out hole.	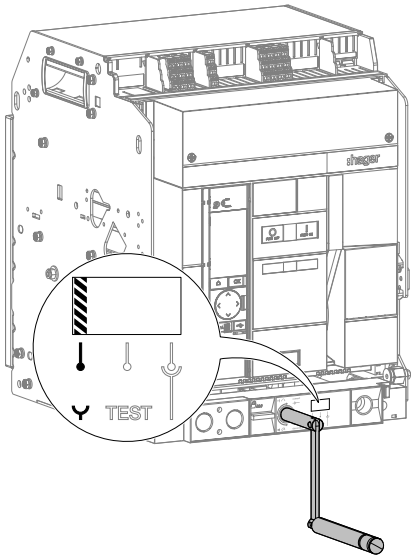
2	Press the padlocking and position acknowledgement tab.	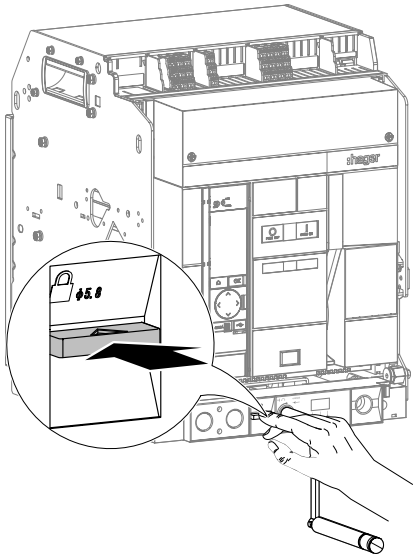

	Action	Illustration
3	Turn the racking handle clockwise until the circuit breaker is in the Test position, the racking handle blocks,	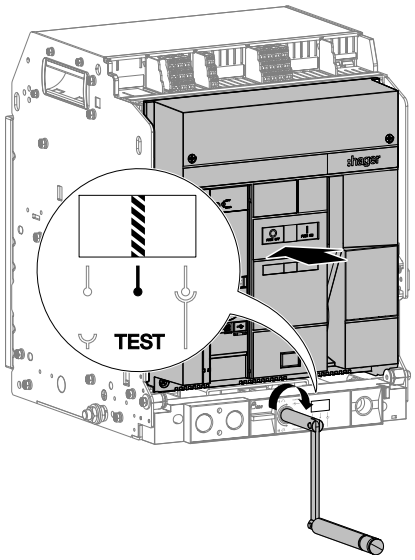
	and the padlocking and position acknowledgement tab comes out of its housing.	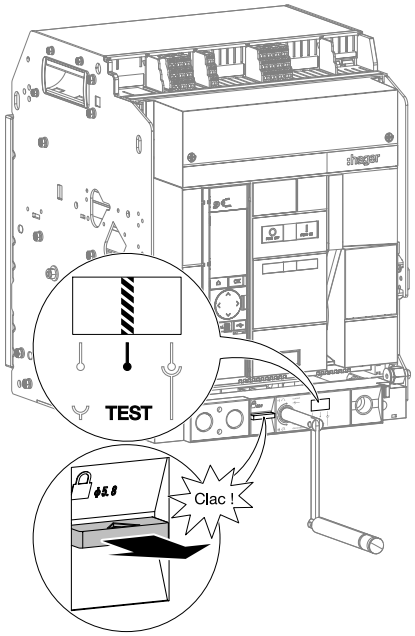
	Verify that the mechanical position indicator signals that the circuit breaker is in the Test position.	

WHAT TO DO

- **If the racking handle cannot be turned,** ensure that the padlocking and position acknowledgement tab is properly pressed in. If the problem persists, contact your Hager representative or local Hager technical support (contact details can be found on the Hager website for your country).
- **If the racking handle does not block in the Test position, if the mechanical position indicator signals incorrectly, or if the padlocking and position acknowledgement tab does not come out of its housing,** contact your Hager representative or local Hager technical support (contact details can be found on the Hager website for your country).

❹ Moving from the Test position to the Connected position

	Action	Illustration
1	Verify that the mechanical position indicator signals that the circuit breaker is in the Test position.	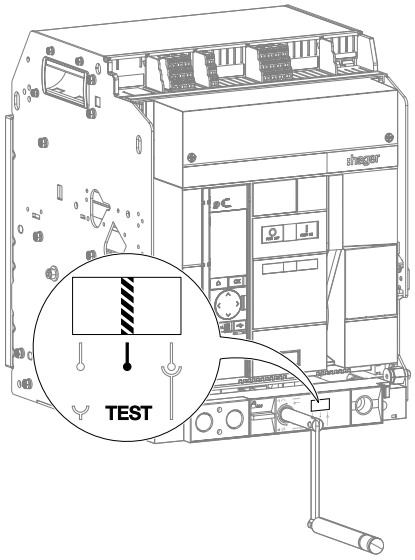
2	Close the circuit breaker by pressing the closing push button I.	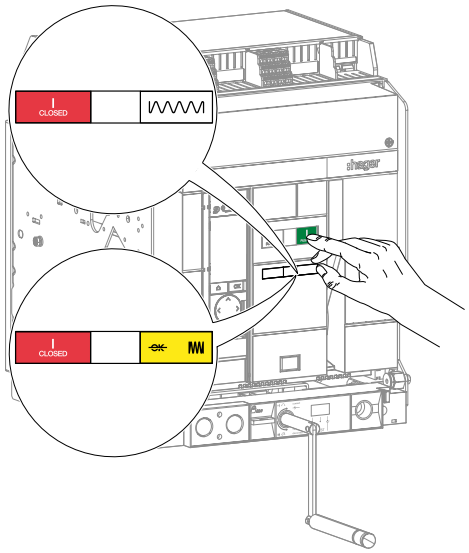

WHAT TO DO

If the circuit breaker does not close:

- check that the closing spring is charged,
- if there is an UV undervoltage release coil on the installation, verify that it is properly powered at its nominal voltage Vn.

If the problem persists, contact your Hager representative or local Hager technical support (contact details can be found on the Hager website for your country).

	Action	Illustration
3	Press the padlocking and position acknowledgement tab.	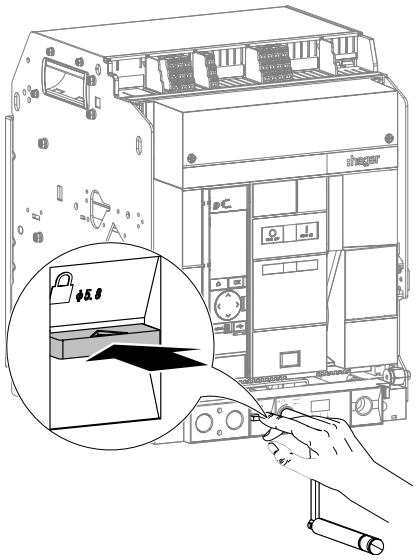
4	Turn the racking handle clockwise for one turn.	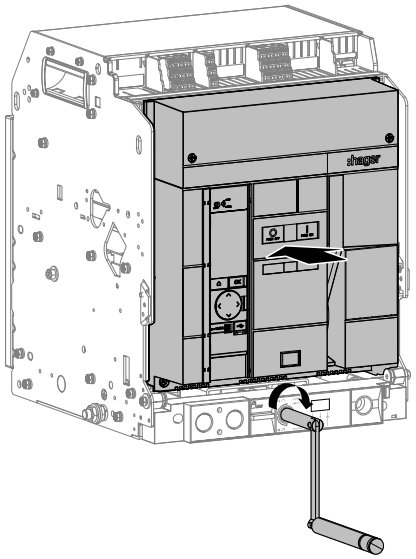

WHAT TO DO

If the racking handle cannot be turned, ensure that the padlocking and position acknowledgement tab is properly pressed in.

If the problem persists, contact your Hager representative or local Hager technical support (contact details can be found on the Hager website for your country).

	Action	Illustration
5	Continue to turn, verifying that the circuit breaker opens and that the status indicators signal that it is open.	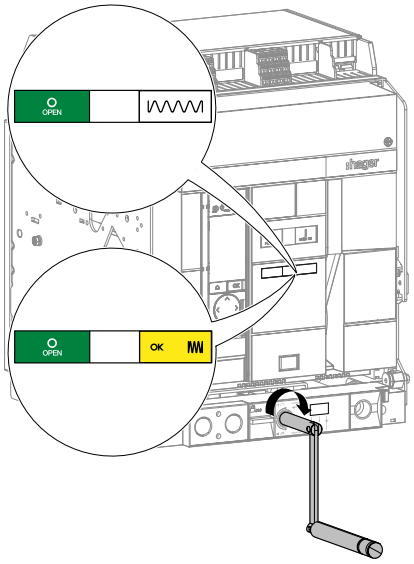

WHAT TO DO

If the circuit breaker does not open or if the status indicators signal incorrectly, a complete chassis check is required to determine if the circuit breaker needs to be replaced.

If the problem persists, contact your Hager representative or local Hager technical support (contact details can be found on the Hager website for your country).

	Action	Illustration
6	Turn the racking handle clockwise again until the circuit breaker is in the Connected position, the racking handle blocks,	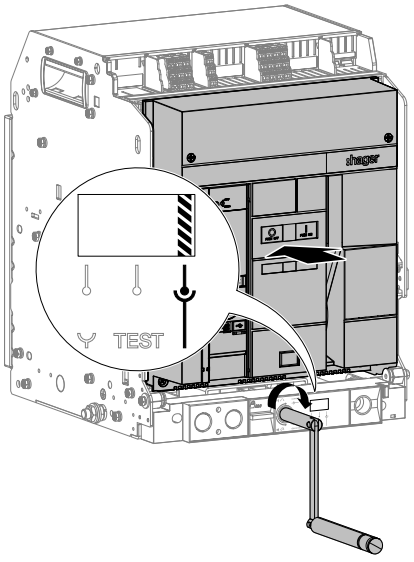

	Action	Illustration
6	*(continued)* and the padlocking and position acknowledgement tab comes out of its housing. Verify that the mechanical position indicator signals that the circuit breaker is in the Connected position.	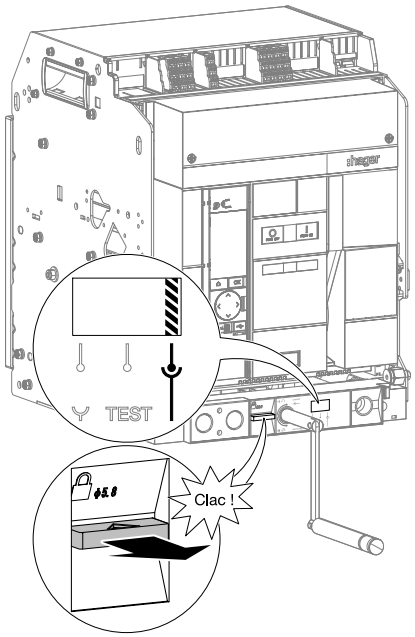

WHAT TO DO

If the racking handle does not block in the Connected position, if the mechanical position indicator signals incorrectly, or if the padlocking and position acknowledgement tab does not come out of its housing, contact your Hager representative or local Hager technical support (contact details for your country can be found on the Hager website).

	Action	Illustration
7	Remove then store the racking handle in its housing.	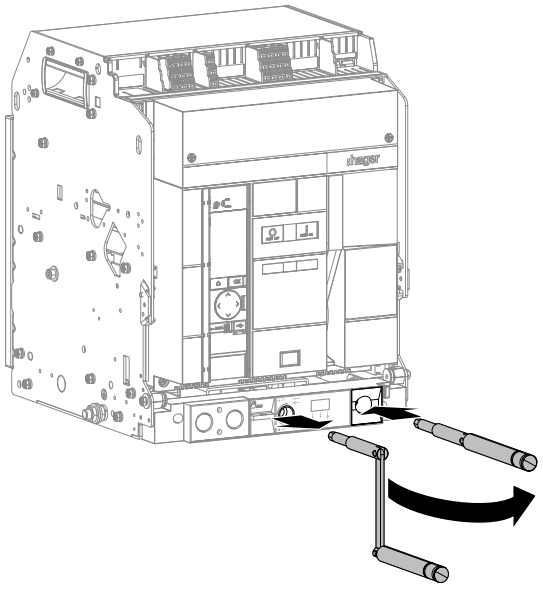

	Action	Illustration
8	Charge the closing spring using the charging handle until the following indicators appear.	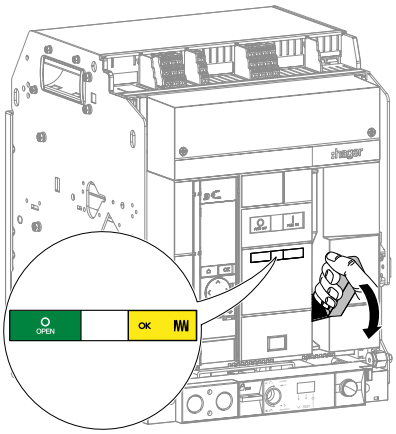
9	Close the circuit breaker by pressing the closing push button .	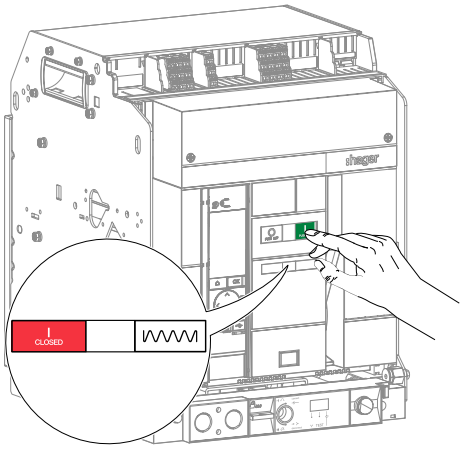

WHAT TO DO

If the circuit breaker does not close:

- check that the closing spring is charged,
- if there is an UV undervoltage release coil on the installation, verify that it is properly powered at its nominal voltage Vn.

If the problem persists, contact your Hager representative or local Hager technical support (contact details can be found on the Hager website for your country).

5 Check the RI open-door racking interlock accessory

	Action	Illustration
1	Test the RI open-door racking interlock accessory. Open the electrical cabinet door.	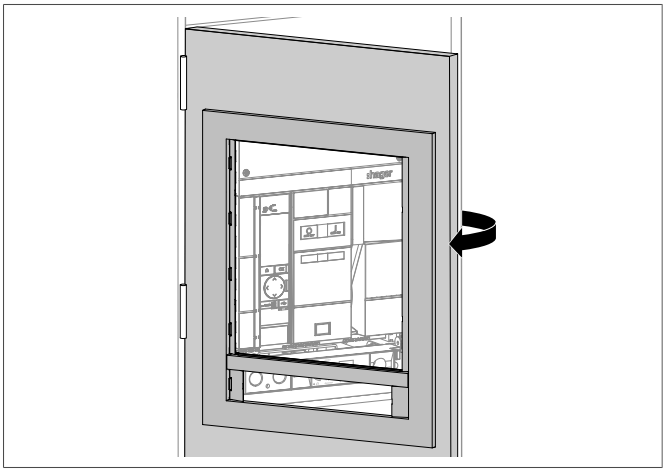
2	Check to ensure that it is not possible to insert the racking handle into the racking-in/racking-out hole.	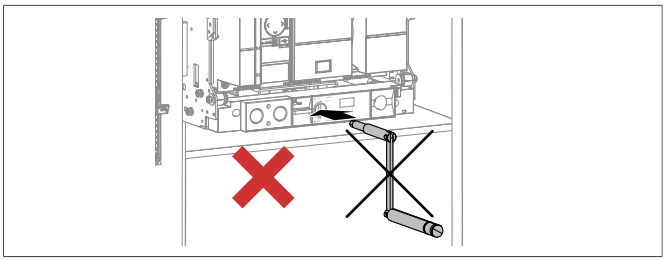

WHAT TO DO

If it is possible to insert the racking handle into the racking-in/racking-out hole, push on the interlocking accessory to verify that it is not blocked.

If the problem persists, contact your Hager representative or local Hager technical support (contact details can be found on the Hager website for your country).

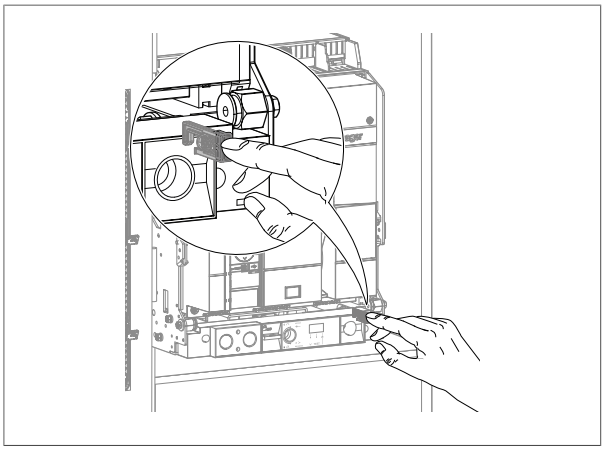

	Action	Illustration
3	Close the electrical cabinet door again.	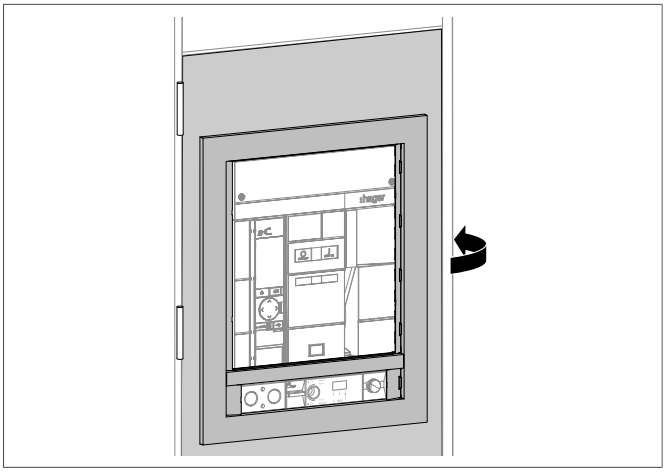
4	Check that it is now possible to insert the racking handle into the racking-in/racking-out hole.	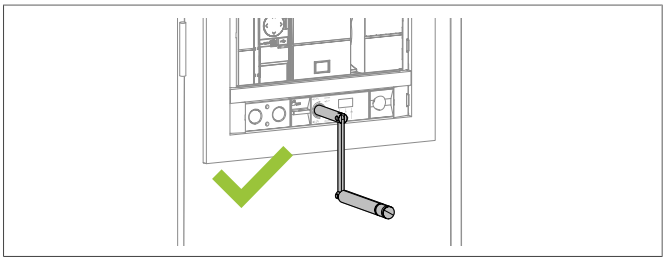

WHAT TO DO

If the racking handle cannot be inserted into the racking-in/racking-out hole, contact your Hager representative or local Hager technical support (contact details can be found on the Hager website for your country).

4.3 Check of the chassis and its moving part

The circuit breaker must be in the following preliminary conditions:

Circuit breaker	Contacts	Closing spring	Position of the circuit breaker in the chassis
Withdrawable	Open	Discharged	Disconnected

	Action	Illustration
1	Put the circuit breaker in the Disconnected position.	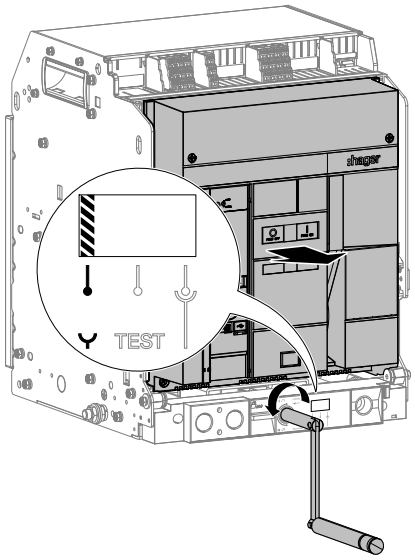
2	Remove the racking handle from the racking-in/racking-out hole and place it in its housing. While pressing the toggles...	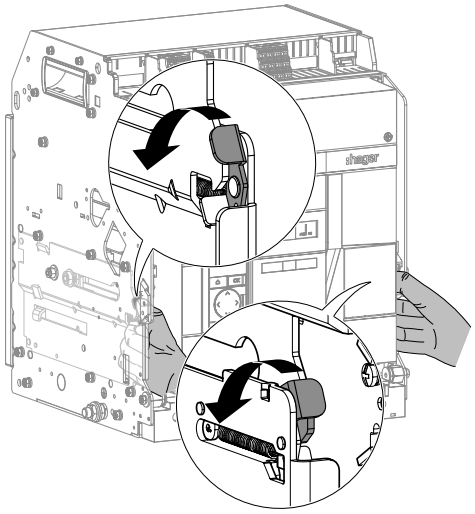

	Action	Illustration
2	*(continued)* pull the handles to take the circuit breaker out of its holder.	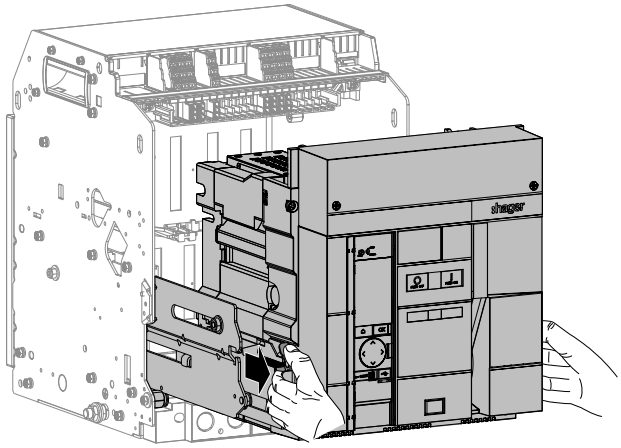

WHAT TO DO

If it is difficult to pull the circuit breaker out of its housing, push it back and pull it out again, making sure that the guide rails are pulled out as far as possible.

If the problem persists, contact your Hager representative or local Hager technical support (contact details can be found on the Hager website for your country).

	Action	Illustration
3	The circuit breaker can be removed from the chassis. Put the circuit breaker on the table provided for maintenance operations.	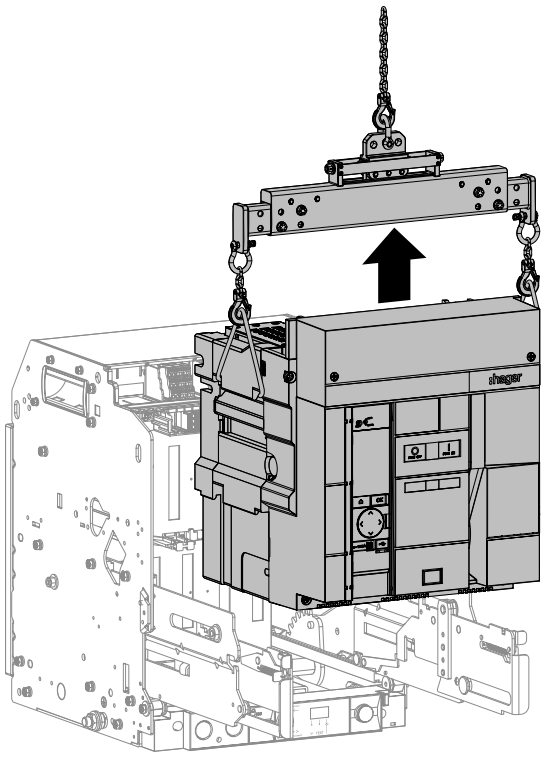

	Action	Illustration
4	Verify that the coating of the jaw contacts is not damaged and shows no traces of copper.	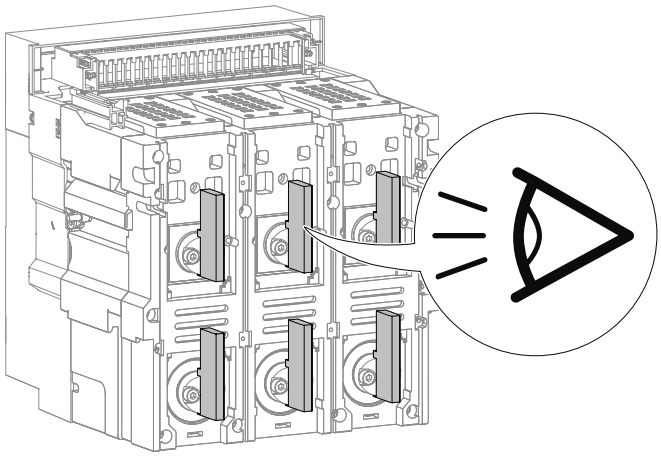

WHAT TO DO

If the racking contacts show any anomalies, contact your Hager representative or local Hager technical support (contact details for your country can be found on the Hager website).

	Action	Illustration
5	Be sure to observe safety regulations and wear the necessary protections. Press the opening mechanism for the insulated safety shutter and verify that the racking contacts are not blackened, and that there is no copper or trace of burning on the surface.	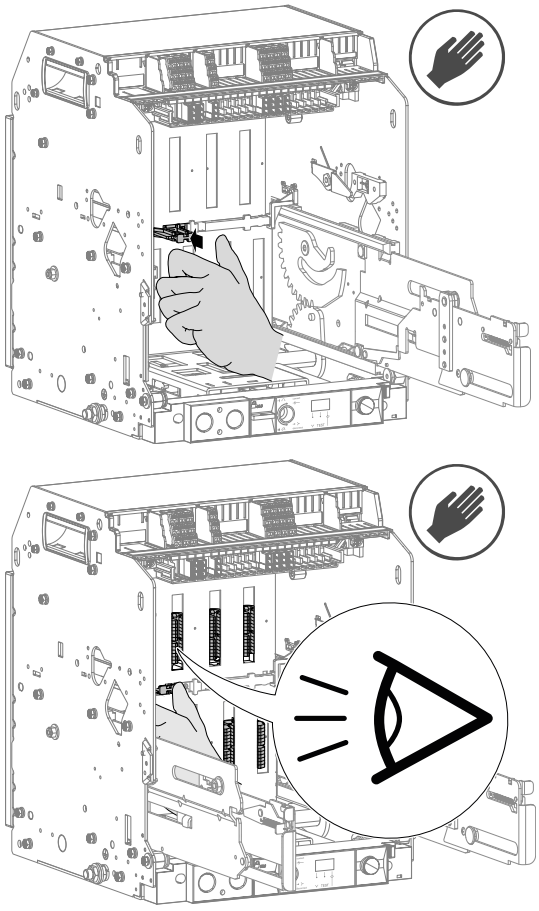

WHAT TO DO

If the jaw contacts show any anomalies, contact your Hager representative or local Hager technical support (contact details for your country can be found on the Hager website).

	Action	Illustration
6	Verify that the interior of the chassis shows no visible sign of change, such as cracks, deformations, parts that are chipped, rusted or damaged. Verify that there is not excessive dust inside the chassis.	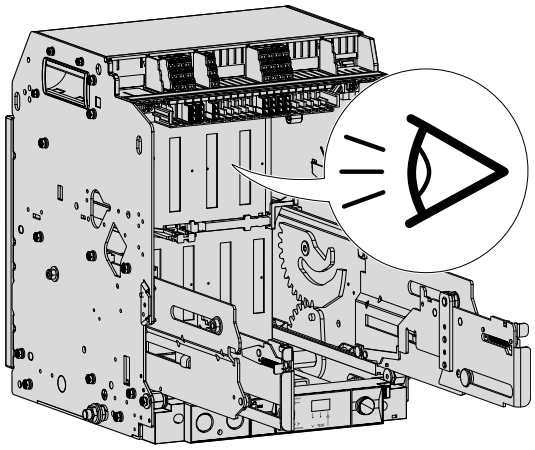

WHAT TO DO

If the chassis interior shows any anomalies, contact your Hager representative or local Hager technical support (contact details for your country can be found on the Hager website).

	Action	Illustration
7	If a position sensor for COM (PSE) is installed, de-dust the blade using a clean and dry cloth or a fine brush.	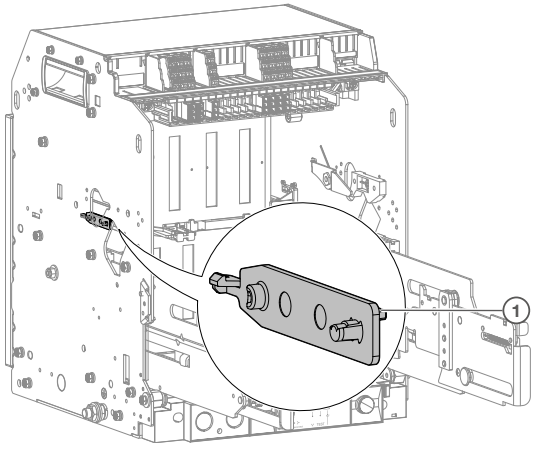 (1) Zones to be cleaned.

	Action	Illustration
7	(continued) Also de-dust the sensor on the moving part by carefully cleaning the 2 high and low zones inside the groove.	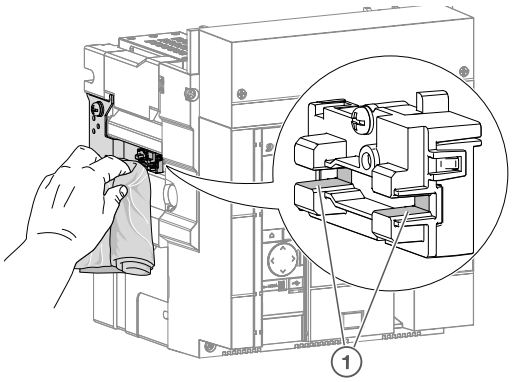 ① Surface to be cleaned.
8	Clean the moving part using a clean, dry cloth and VZ404 detergent for plastic surfaces. For more stubborn dirt, use Fuchs Solvert 70 brake cleaner.	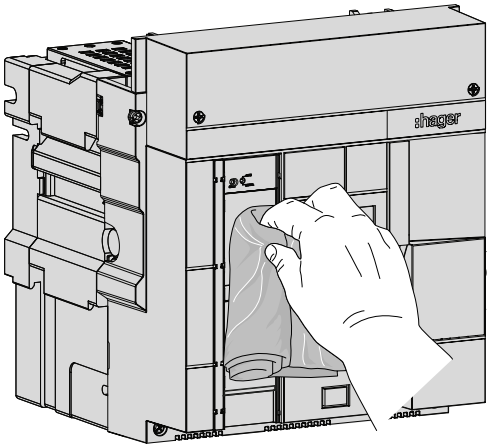

Notice

Risk of mechanical damage.

Do not use solvent-based products to clean the circuit breaker (except brake cleaner).

9	Put the drawout circuit breaker back into its chassis (see Chapter 6.3, Put back in place the drawout circuit breaker).	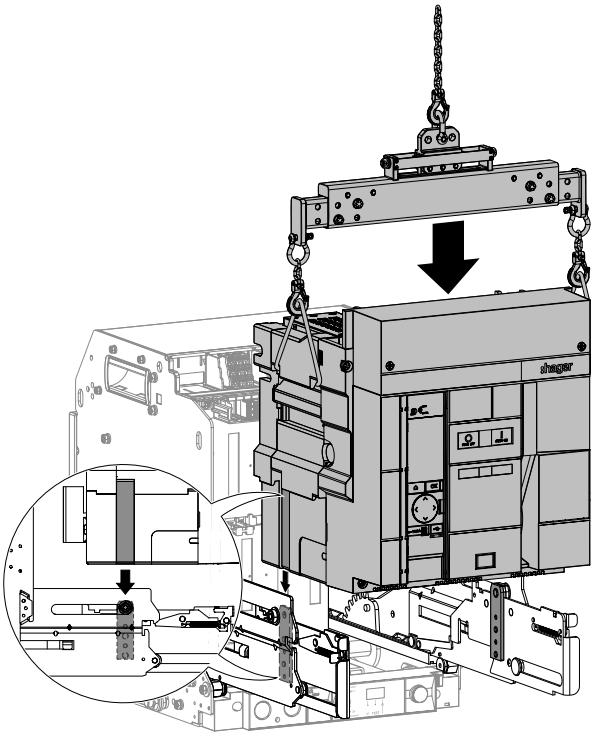

4.4 Check of the opening and closing of the circuit breaker

The circuit breaker must be in the following preliminary conditions:

Circuit breaker	Contacts	Closing spring	Position of the circuit breaker in the chassis
Fixed	Open	Discharged	-
Withdrawable	Open	Discharged	Disconnected

Danger

Danger to life, risk of injury due to electric shock, or risk of serious injury. Take all necessary precautions to protect yourself from the risks of electric shock when connecting and disconnecting the power supply wires of the MO charging motor.

	Action	Illustration
1	**For a fixed circuit breaker equipped with an MO spring charging motor**, disconnect the power supply. **For a drawout circuit breaker,** place it in the **Disconnected** position.	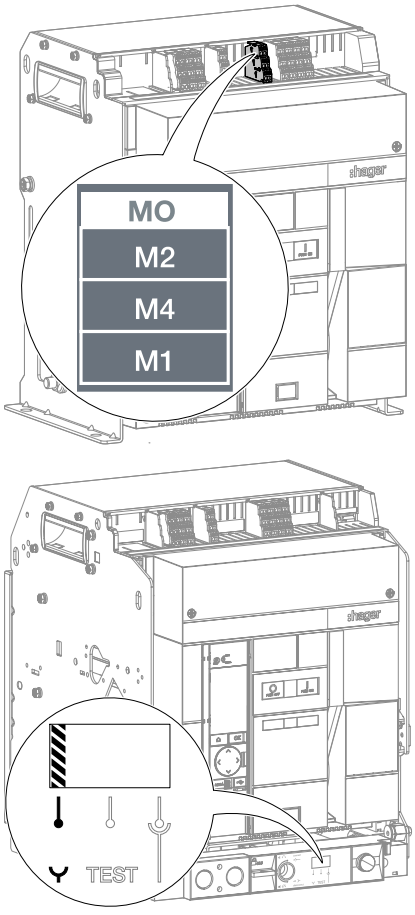

	Action	Illustration
2	If the CYC cycle counter is installed, note its value.	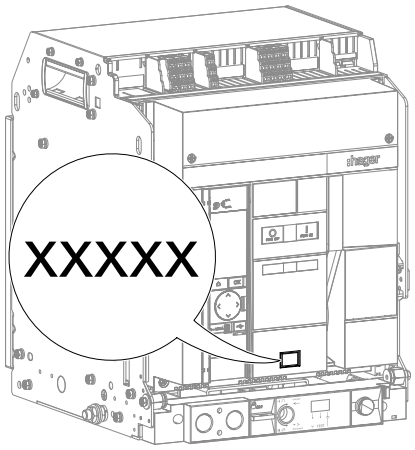
3	Charge the closing spring using the charging handle until the following indicators appear.	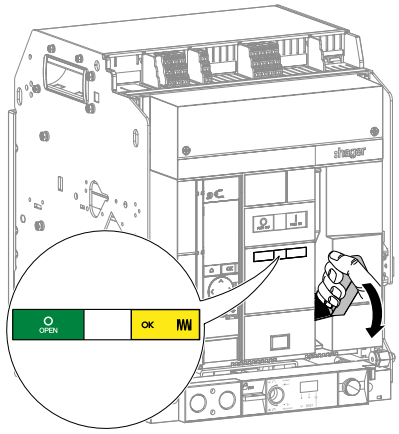
4	If the CYC cycle counter is installed, verify that it increments.	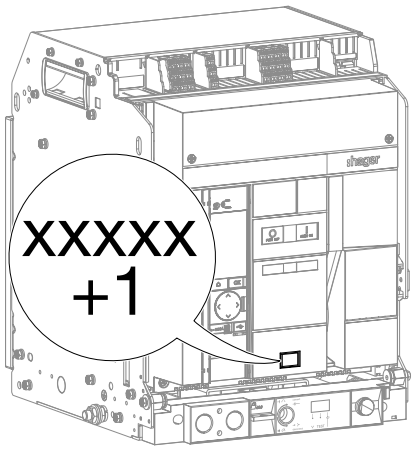

WHAT TO DO

If the cycle counter does not increment, verify that it is correctly installed.

If this is the case, and it still does not work, replace it (see Chapter 6.21, CYC Operation Cycle Counter).

	Action	Illustration
5	Close the circuit breaker by pressing the closing push button I. Verify that the indicators change status and signal that the circuit breaker is closed and the closing spring discharged.	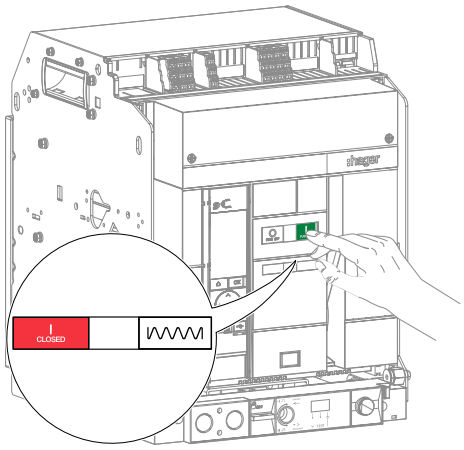

WHAT TO DO

If the circuit breaker does not close or the status indicators do not indicate the correct information, refer to Troubleshooting Guide 6LE009769A.

If the problem persists, contact your Hager representative or local Hager technical support (contact details for your countrycan be found on the Hager website).

	Action	Illustration
6	Charge the closing spring. Verify that the circuit breaker remains closed and that the indicators signal that the circuit breaker is closed I CLOSED, and that the closing spring is charged but not ready to close.	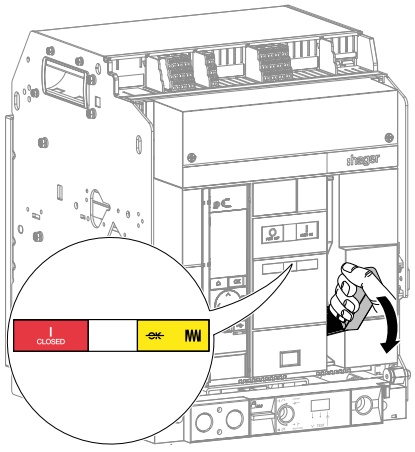

WHAT TO DO

If the circuit breaker opens and the opening and closing indicator displays O OPEN**,** it means that the contacts are not locking mechanically.

Contact your Hager representative or local Hager technical support (contact details on the Hager website for your country).

WHAT TO DO

If the status indicators do not indicate the correct information, refer to Troubleshooting Guide 6LE009769A.

If the problem persists, contact your Hager representative or local Hager technical support (contact details for your countrycan be found on the Hager website).

7	Open the circuit breaker by pressing the opening push button . Verify that the indicators are changing status and are signalling that the circuit breaker is open and the closing spring is charged and ready to close.	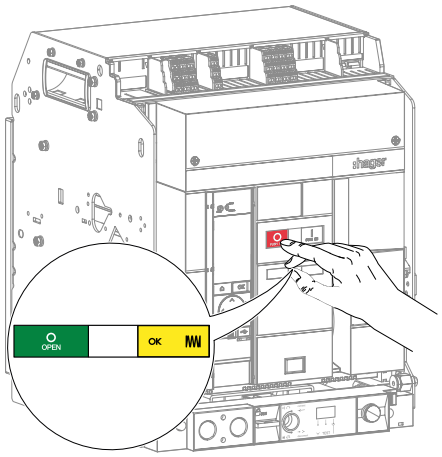

WHAT TO DO

If the circuit breaker does not open or the status indicators do not indicate the correct information, refer to Troubleshooting Guide 6LE009769A.

If the problem persists, contact your Hager representative or local Hager technical support (contact details for your countrycan be found on the Hager website).

4.5 Check of the opening and closing of the circuit breaker using coils

The circuit breaker must be in the following preliminary conditions:

Circuit breaker	Contacts	Closing spring	Position of the circuit breaker in the chassis
Fixed	Open	Charged	-
Withdrawable	Open	Charged	Test

Danger

Danger to life, risk of injury due to electric shock, or risk of serious injury.

Take all necessary precautions to protect yourself from the risks of electric shock when connecting and disconnecting the power supply wires of the MO charging motor.

❶ Closing of the circuit breaker using a CC closing coil

	Action	Illustration
1	**For a fixed circuit breaker equipped with an MO spring charging motor**, re-connect the power supply.	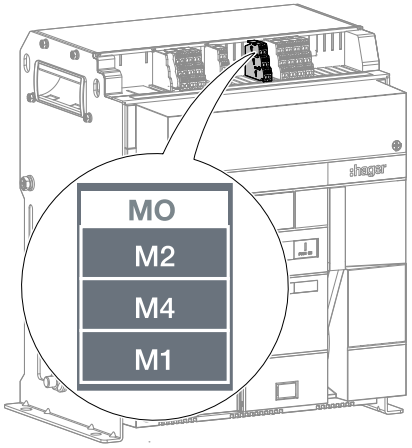
2	If the CYC cycle counter is installed, note its value.	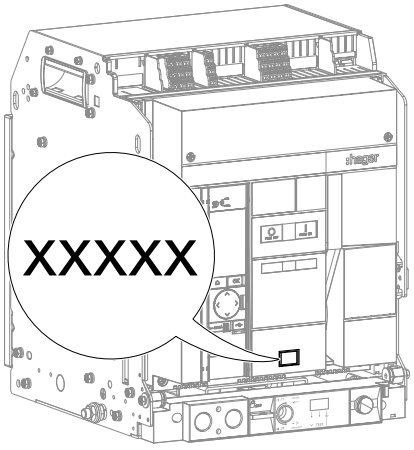

	Action	Illustration
3	Press the control button controlling the CC closing coil and verify that the circuit breaker closes.	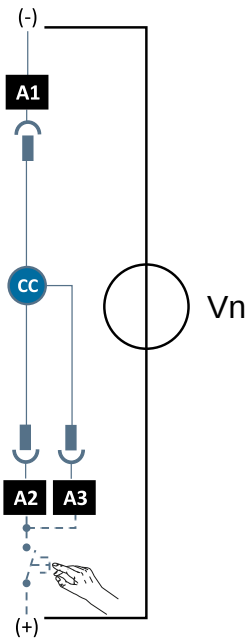

WHAT TO DO

If the circuit breaker does not close, verify that the external control circuit is functioning correctly, then follow the coil test instructions in the replacement chapter (see Chapter 6.17, CC closing coil).

If the problem persists, contact your Hager representative or local Hager technical support (contact details can be found on the Hager website for your country).

	Action	Illustration
4	Verify that the indicators signal that the circuit breaker is closed and: • If the circuit breaker is equipped **with an MO spring charging motor,** that **the closing spring is charged.**	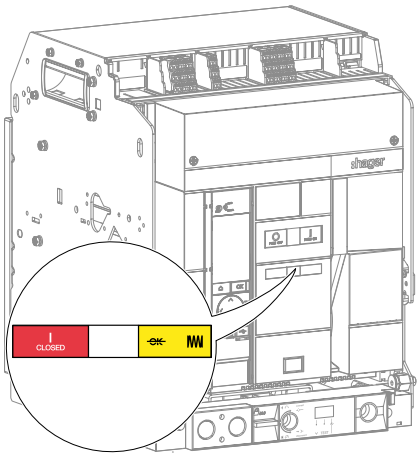
	• If the circuit breaker is not equipped **with an MO spring charging motor,** that **the closing spring is discharged**.	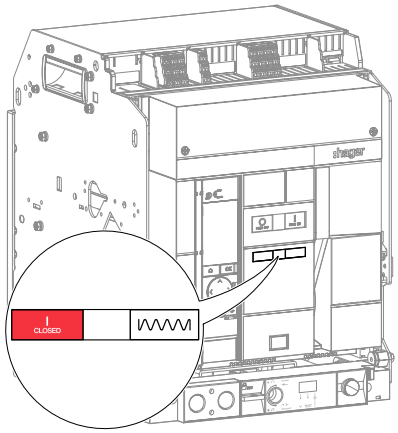

WHAT TO DO

If the indicators display different information, refer to Troubleshooting Guide 6LE009769A.
If the problem persists, contact your Hager representative or local Hager technical support (contact information on the Hager website for your country).

	Action	Illustration
5	If the CYC cycle counter is installed, verify that it increments.	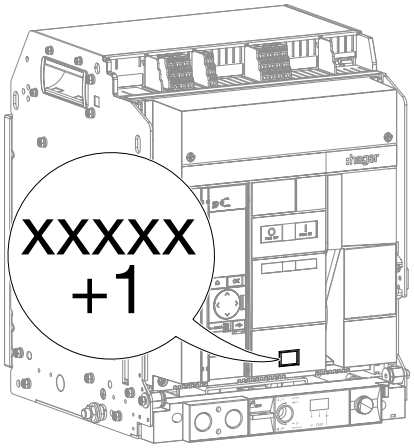

WHAT TO DO

If the cycle counter does not increment, verify that it is correctly installed.

If the problem persists, replace it (see Chapter 6.21, CYC Operation Cycle Counter).

❷ Opening the circuit breaker using an SH shunt trip coil

	Action	Illustration
1	If the circuit breaker is equipped with an MO spring charging motor, the indicators signal that the circuit breaker is closed and that the closing spring is charged.	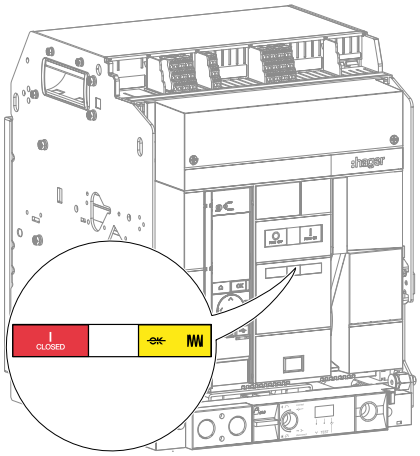
2	If the circuit breaker is not equipped with an MO spring charging motor, charge the closing spring using the charging handle until the following indicators appear.	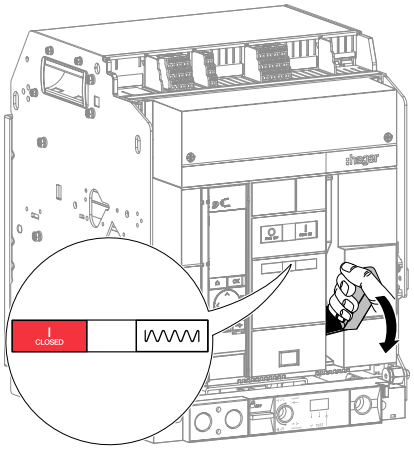
3	Press the control button of the SH or SH2 shunt trip coil.	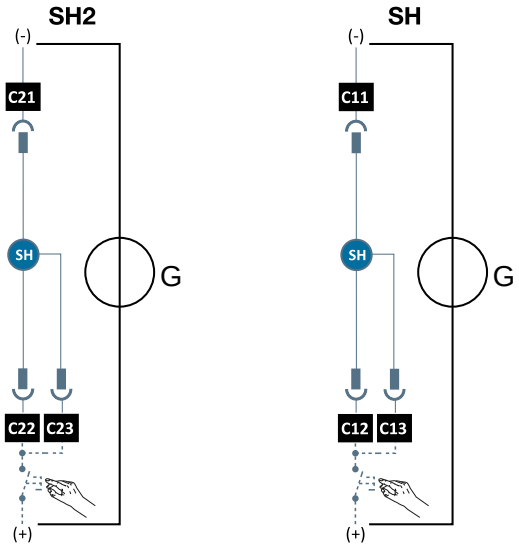

	Action	Illustration
4	Check that the circuit breaker opens. Verify that the indicators signal that the circuit breaker is open and: • If the circuit breaker is not equipped **with an MO spring charging motor,** that **the closing spring is discharged**. • If the circuit breaker is equipped **with an MO spring charging motor,** that **the closing spring is charged.**	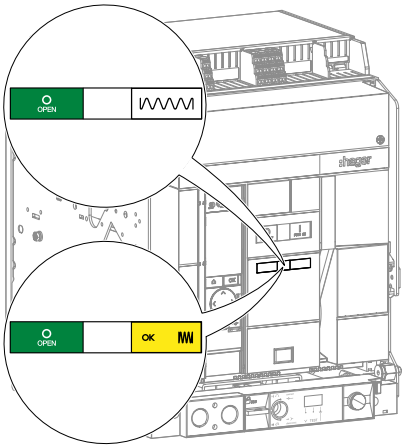

WHAT TO DO

If the circuit breaker does not open, verify that the external control circuit is functioning correctly, then follow the coil test instructions in the replacement chapter ().

If the indicators display different information, refer to Troubleshooting Guide 6LE009769A.

If the problem persists, contact your Hager representative or local Hager technical support (contact details can be found on the Hager website for your country).

❸ Opening the circuit breaker using a UV undervoltage release coil

Information

Before carrying out the test, make sure that the undervoltage release coil UV is supplied.

	Action	Illustration
1	If the circuit breaker is equipped with an MO spring charging motor, the indicators signal that the circuit breaker is open and that the closing spring is charged.	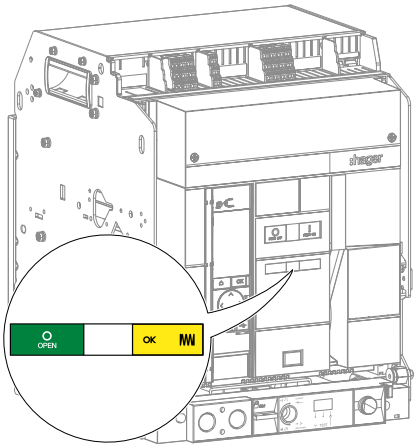
2	If the circuit breaker is not equipped with an MO spring charging motor, charge the closing spring using the charging handle until the following indicators appear.	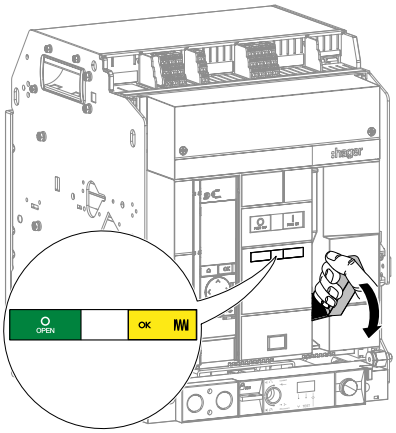
3	Close the circuit breaker by pressing the closing push button I.	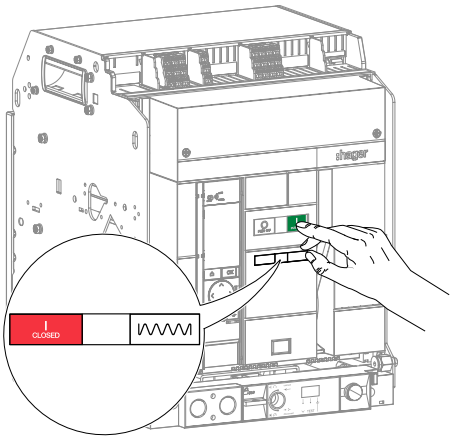

	Action	Illustration
4	Switch off the power supply to the UV or UV2 under-voltage coil by pressing the control button.	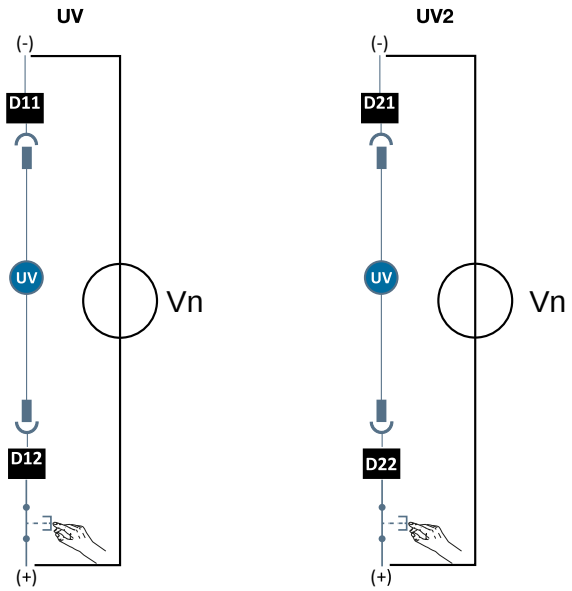
5	Check that the circuit breaker opens.	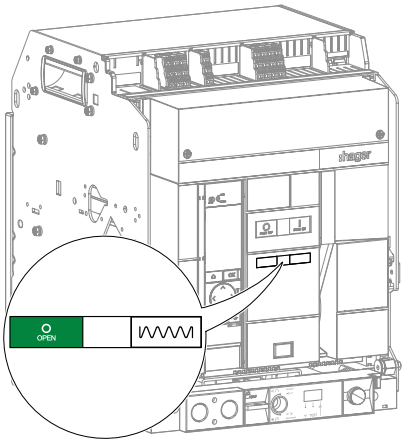

WHAT TO DO

If the circuit breaker does not open, verify that the external control circuit is functioning correctly, then follow the coil test instructions in the replacement chapter ().

If the problem persists, contact your Hager representative or local Hager technical support (contact details can be found on the Hager website for your country).

	Action	Illustration
6	Verify that the indicators signal that the circuit breaker is open and: • If the circuit breaker is equipped **with an MO spring charging motor,** that **the closing spring is charged.**	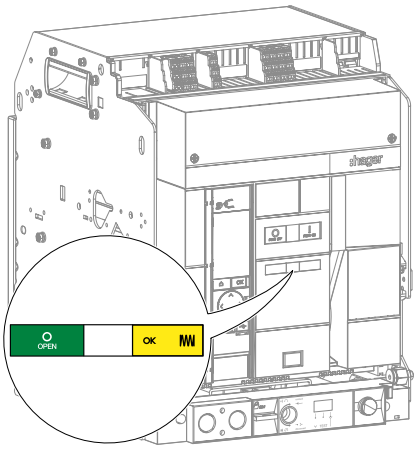
	• If the circuit breaker is not equipped **with an MO spring charging motor,** that **the closing spring is discharged**.	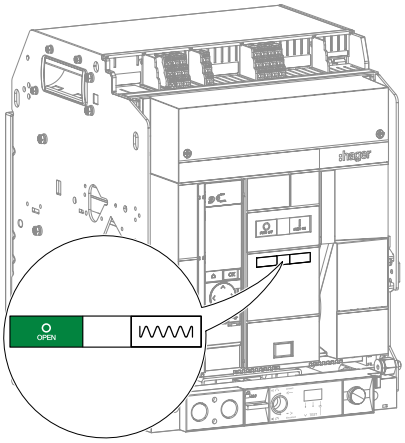

WHAT TO DO

If the indicators display different information, refer to Troubleshooting Guide 6LE009769A.

If the problem persists, contact your Hager representative or local Hager technical support (contact details can be found on the Hager website for your country).

4.6 Checking the MO spring charging motor

The circuit breaker must be in the following preliminary conditions:

Circuit breaker	Contacts	Closing spring	Position of the circuit breaker in the chassis
Fixed	Open	Charged	-
Withdrawable	Open	Charged	Test

Danger

Danger to life, risk of injury due to electric shock, or risk of serious injury.

Take all necessary precautions to protect yourself from the risks of electric shock when connecting and disconnecting the power supply wires of the MO charging motor.

	Action	Illustration
1	If necessary, unclip the protection cover from the terminal blocks.	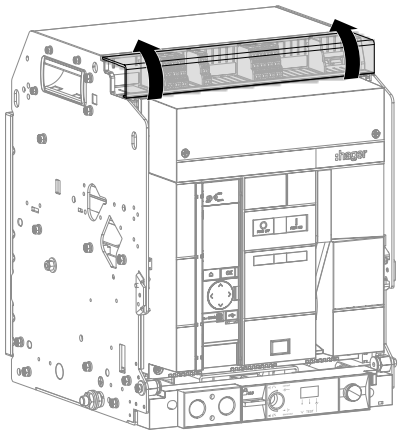
2	Cut-off the power supply of the MO spring charging motor	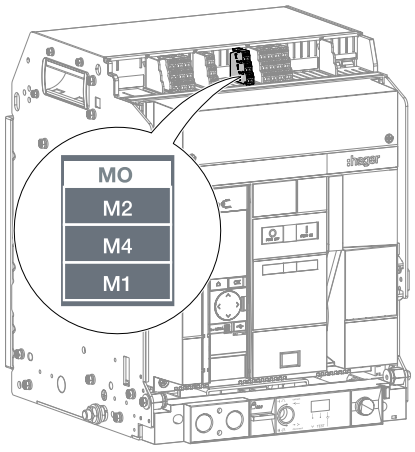

	Action	Illustration
3	Close the circuit breaker by pressing the closing push button .	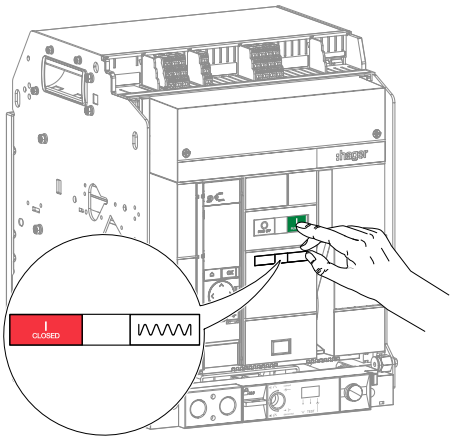
4	Restore the power supply of the MO spring charging motor	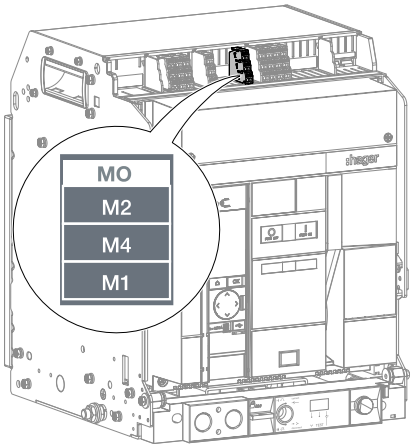
5	Verify that the indicators signal that the circuit breaker is closed and that the closing spring is charged.	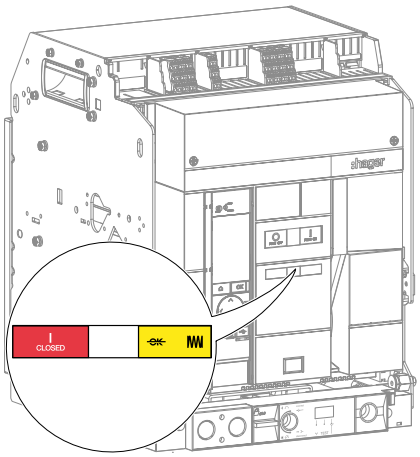

WHAT TO DO

If the closing spring does not charge, check the MO charging motor's power circuit.

If the problem persists, contact your Hager representative or local Hager technical support (contact details can be found on the Hager website for your country).

4.7 Check of the TB connection terminal blocks

The circuit breaker must be in the following preliminary conditions:

Circuit breaker	Contacts	Closing spring	Position of the circuit breaker in the chassis
Fixed	Open	Discharged	-
Withdrawable	Open	Discharged	Disconnected

Danger

Danger to life, risk of injury due to electric shock, or risk of serious injury. Cut off power to the accessories before carrying out any work on the TB connection terminals.

For a drawout circuit breaker:

	Action	Illustration
1	Remove the circuit breaker from the chassis (see Chapter 6.1, Removal of the drawout circuit breaker).	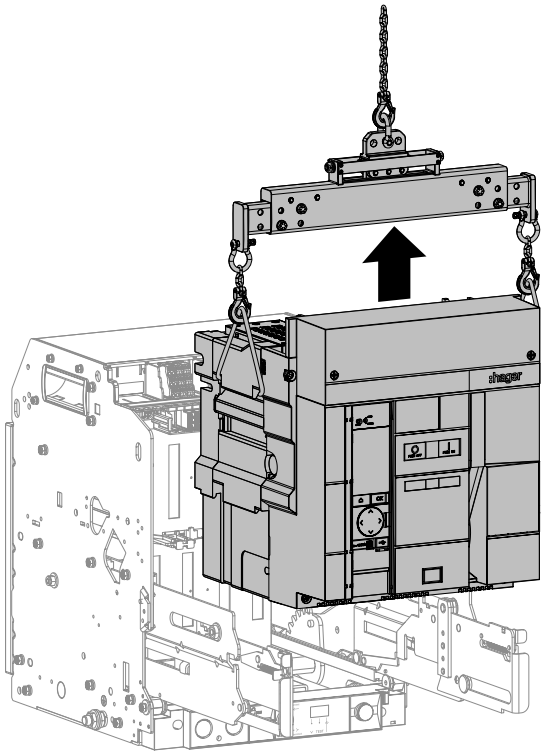

	Action	Illustration
2	Verify that the cables are correctly and solidly connected on the terminals and that they are properly insulated.	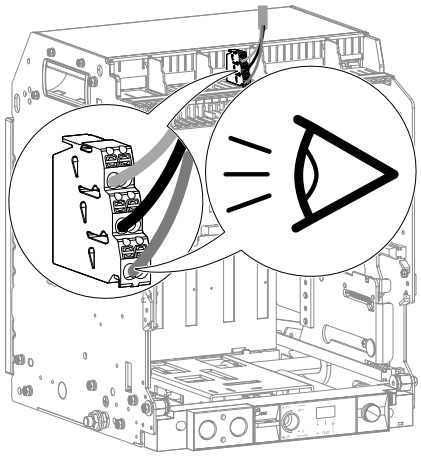

WHAT TO DO

- **If the cables do not hold sufficiently,** replace the terminal blocks (see Chapter 6.10, TB connection terminal block).
- **If the cables are damaged or badly insulated** replace them.

	Action	Illustration
3	Verify that the terminals are not damaged and that they show no traces of heating or deformation or changes of colour.	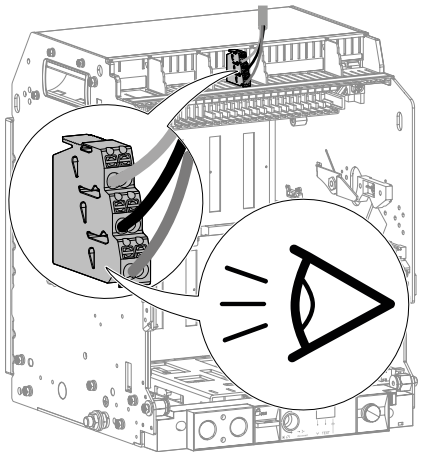

WHAT TO DO

If the terminal blocks are damaged, replace them (see Chapter 6.10, TB connection terminal block).

	Action	Illustration
4	Unscrew the 2 screws a quarter of a turn, then remove the terminal strip.	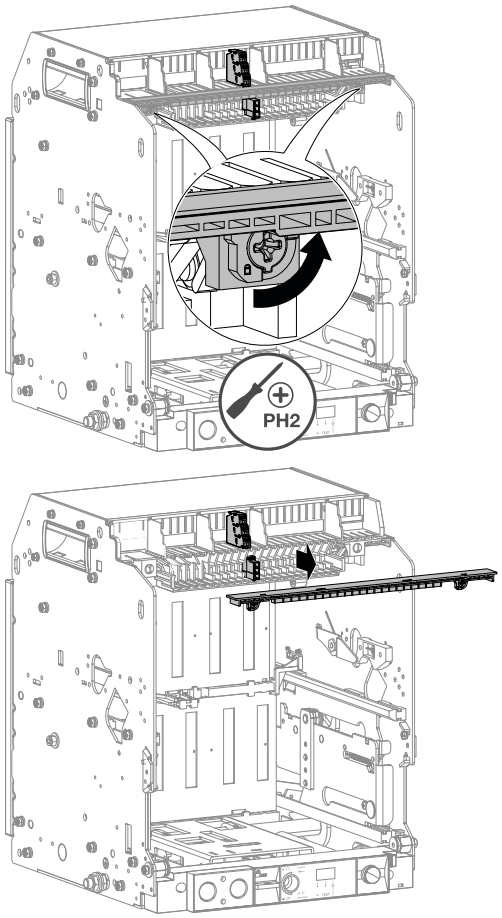
5	Verify that the wiring is in good condition and properly insulated between the upper and lower part of the terminal blocks.	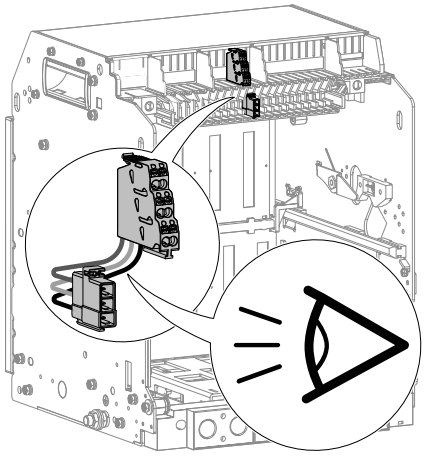

WHAT TO DO

If the wiring is damaged or poorly insulated, replace the terminal blocks (see Chapter 6.10, TB connection terminal block).

	Action	Illustration
6	Verify that the terminals are correctly clipped into the holder and do not move.	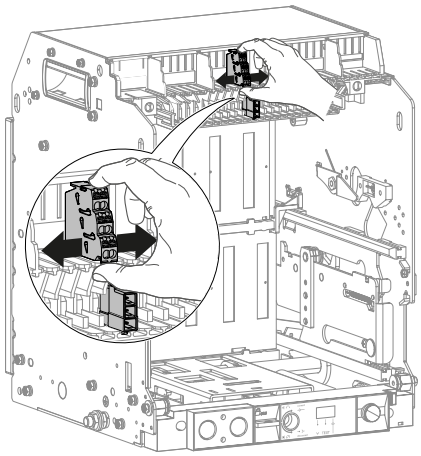

WHAT TO DO

If a terminal block is badly clipped, reclip it.

If the problem persists, replace the terminal block (see Chapter 6.10, TB connection terminal block).

	Action	Illustration
7	Replace the terminal strip then put the circuit breaker back in the Disconnected position. Replace the terminal block protection cover, then tighten the 2 screws.	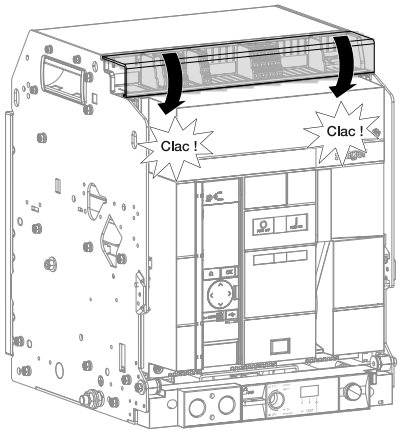

For a fixed circuit breaker:

	Action	Illustration
1	Verify that the cables are correctly and solidly connected on the terminals and that they are properly insulated.	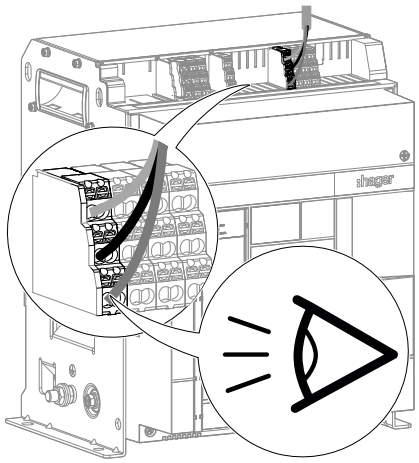

WHAT TO DO

- **If the cables do not hold sufficiently,** replace the terminal blocks (see Chapter 6.10, TB connection terminal block).
- **If the cables are damaged or badly insulated,** replace them.

	Action	Illustration
2	Verify that the terminals are not damaged and that they show no traces of heating or deformation or changes of colour.	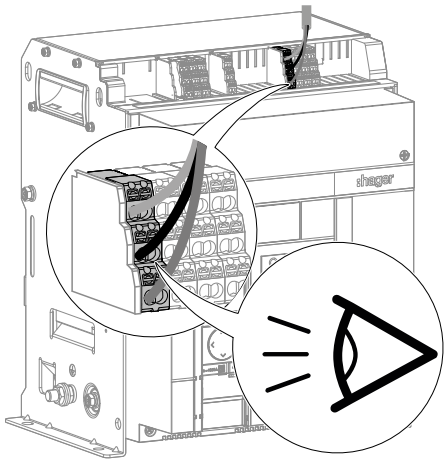

WHAT TO DO

If the terminal blocks are damaged, replace them (see Chapter 6.10, TB connection terminal block).

	Action	Illustration
3	Verify that the terminals are correctly clipped into the holder and do not move.	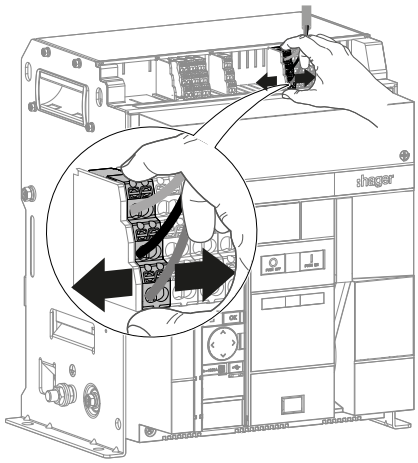

WHAT TO DO

If a terminal block is badly clipped, reclip it.

If the problem persists, replace the terminal block (see Chapter 6.10, TB connection terminal block).

	Action	Illustration
4	Remove the top cover.	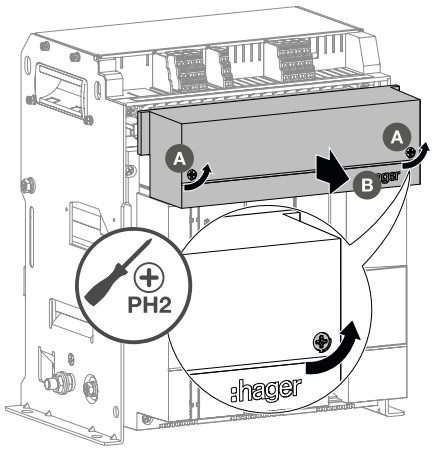
5	Unscrew the 2 screws by a quarter of a turn ...	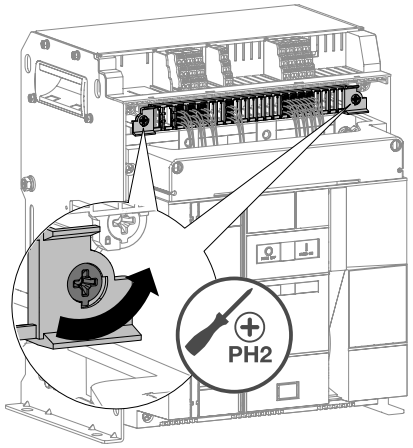

	Action	Illustration
	then remove the terminal block support.	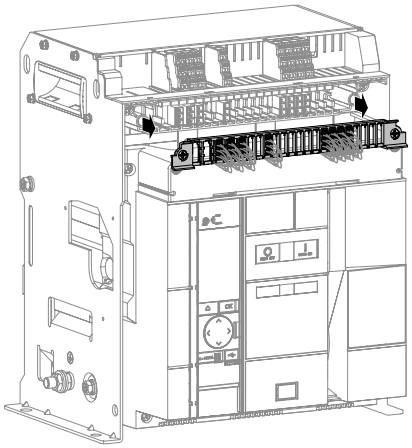
6	Unscrew the 2 screws a quarter of a turn, then remove the terminal strip.	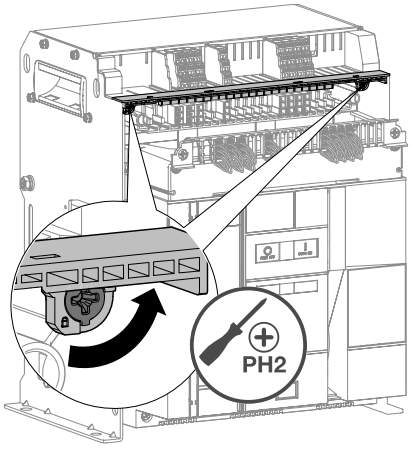 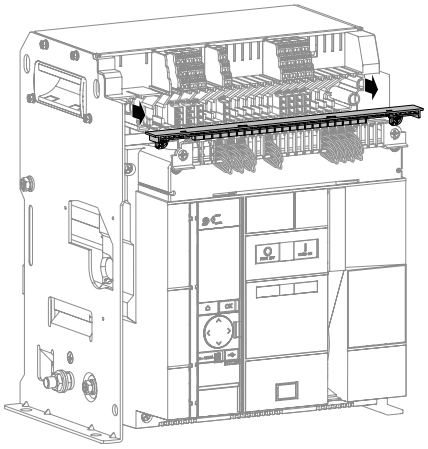

	Action	Illustration
7	Verify that the wiring is in good condition and properly insulated between the upper and lower part of the terminal blocks.	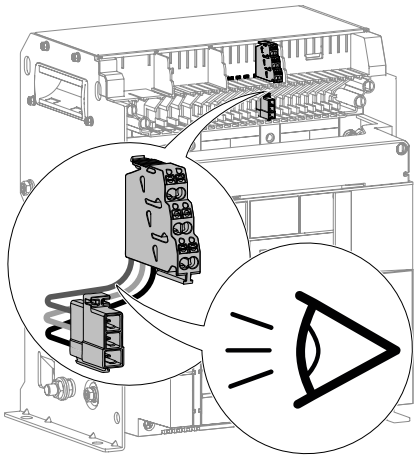

WHAT TO DO

If the wiring is damaged or poorly insulated, replace the terminal blocks (see Chapter 6.10, TB connection terminal block).

	Action	Illustration
8	Refit the terminal strip, then tighten the 2 screws a quarter of a turn.	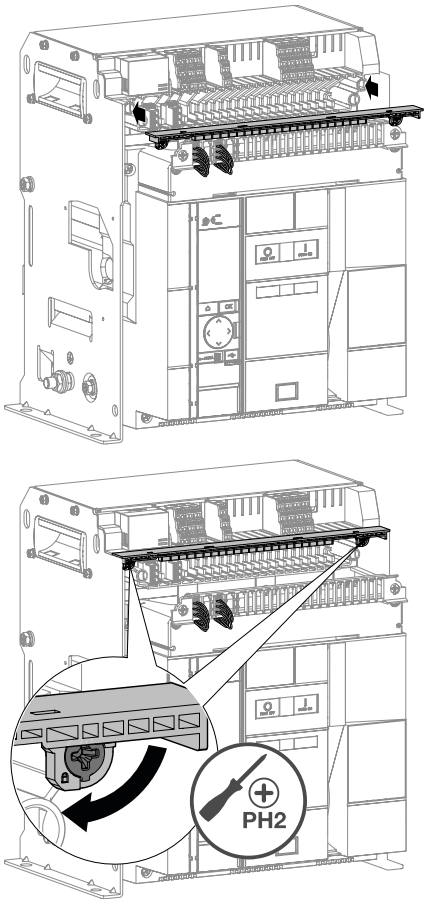

	Action	Illustration
9	Position the terminal block support on the circuit breaker...	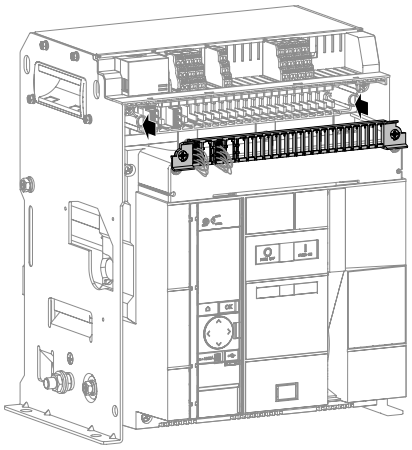
	then screw in the 2 screws a quarter of a turn.	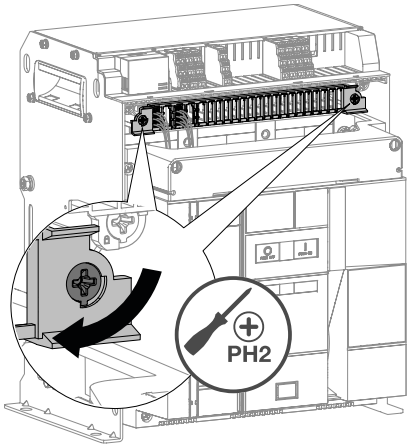
10	Position then lock the top cover on the circuit breaker by tightening the 2 screws by a quarter turn.	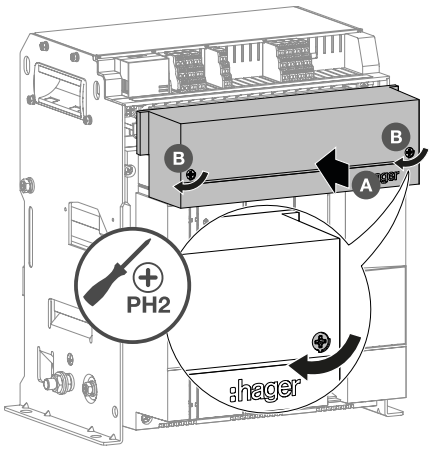

4.8 Checking the circuit breaker's interlock in OFF

The circuit breaker must be in the following preliminary conditions:

Circuit breaker	Contacts	Closing spring	Position of the circuit breaker in the chassis
Fixed	Open	Discharged	-
Withdrawable	Open	Discharged	Disconnected

❶ Checking the circuit breaker's interlock in OFF using an OLK keylock

	Action	Illustration
1	Check that the key is in the horizontal position. Verify that the circuit breaker is not locked.	

WHAT TO DO

If the key is missing or broken, replace the lock (see Chapter 6.25, Accessory for locking the circuit breaker in OFF by OLK keylock).

	Action	Illustration
2	Press the opening push button .	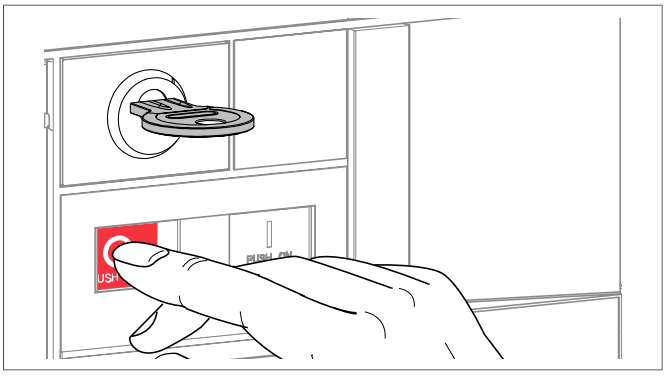

	Action	Illustration
3	While pressing down the opening push button , put the key back into the vertical position by turning it counter-clockwise.	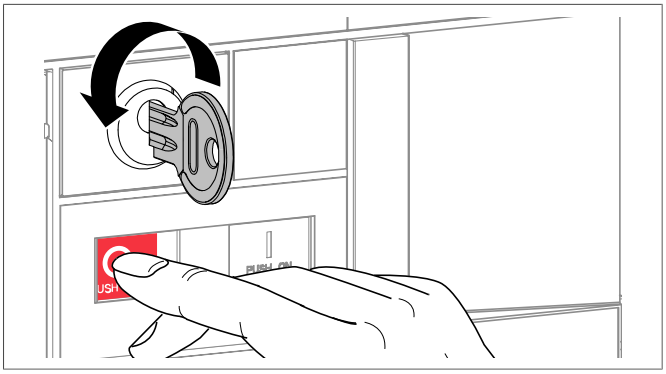

WHAT TO DO

If the key doesn't turn, replace the lock (see Chapter 6.25, Accessory for locking the circuit breaker in OFF by OLK keylock).

	Action	Illustration
4	Remove the key.	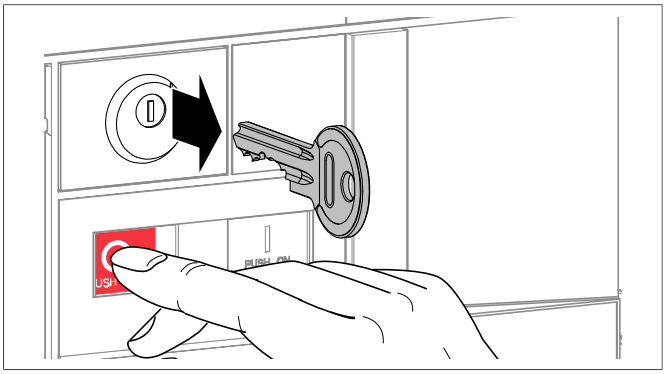
5	Then release the opening push button . The latter returns to its initial position.	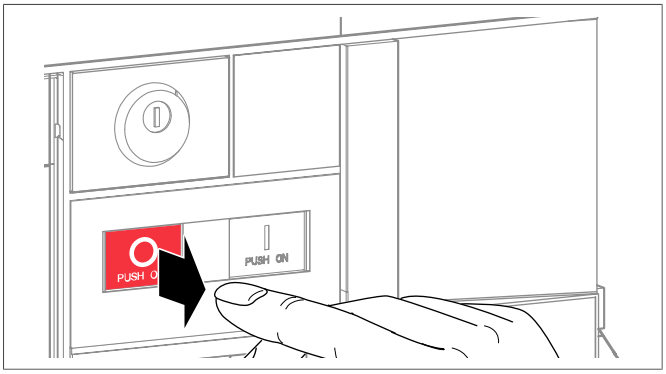

	Action	Illustration
6	Charge the closing spring using the charging handle until the following indicators appear.	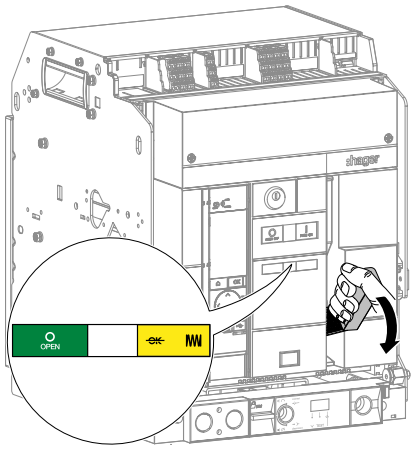
7	If the circuit breaker is equipped with a UV or UV2 undervoltage release coil, power it to 100% of Vn, min (for example for a 380-480 V coil, Vn min = 380 V) or remove it from the product (see Chapter 6.15, UV undervoltage release coil).	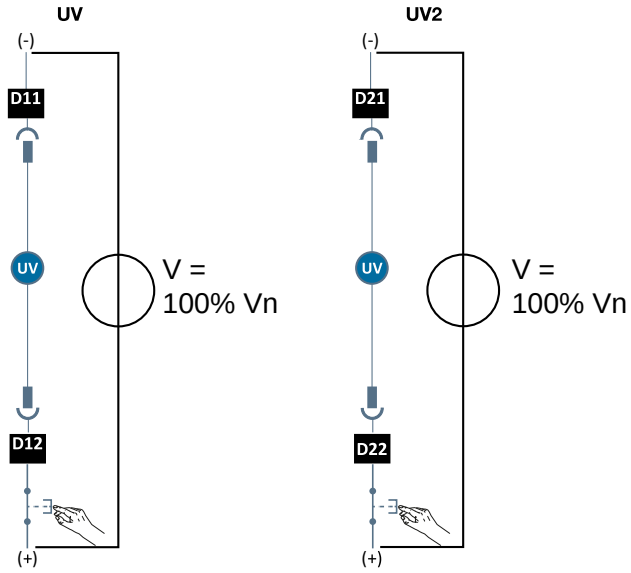
8	Check that it is no longer possible to close the circuit breaker by pressing the closing push button .	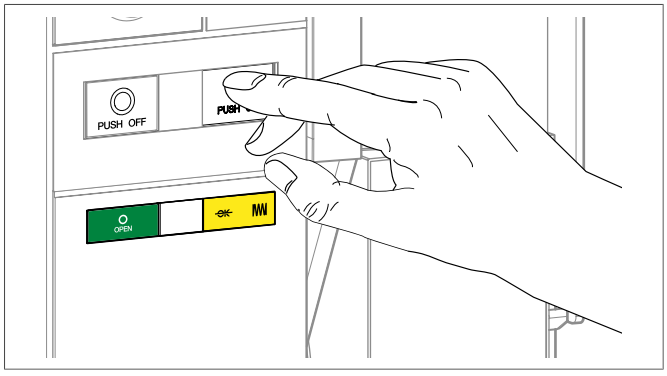

WHAT TO DO

- **If the circuit breaker closes,** verify that the lock is correctly installed (See Manual 6LE007488A), then resume the test procedure from the start.
- **If the lock is damaged or oxidised,** replace it (see Chapter 6.25, Accessory for locking the circuit breaker in OFF by OLK keylock).

If the problem persists, contact your Hager representative or local Hager technical support (contact details can be found on the Hager website for your country).

	Action	Illustration
9	If there is a 2nd keylock installed for this lock, remove the 1st key following instructions 1 to 4, then resume the test procedure from the start with the 2nd key.	
10	To unlock the device, insert the key into the lock.	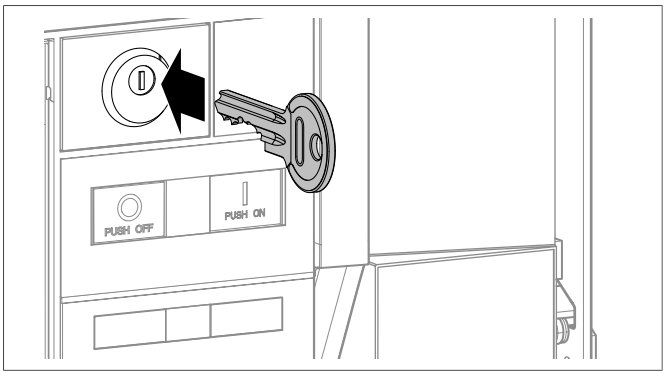
11	Turn the locking device key clockwise and verify that it cannot be removed from the lock.	

WHAT TO DO

If the key doesn't turn, replace the lock (see Chapter 6.25, Accessory for locking the circuit breaker in OFF by OLK keylock).

	Action	Illustration
12	Verify that the status of the closing spring indicator has changed to ‘ready to close’.	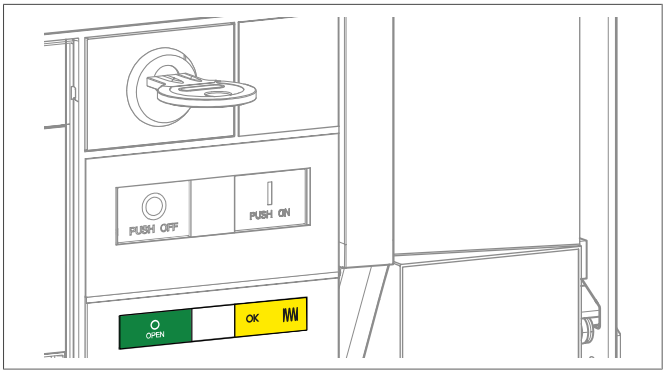
13	Check that it is now possible to close the circuit breaker by pressing the closing push button .	

WHAT TO DO

- **If the circuit breaker doesn't close,** verify that the lock is correctly installed (See Manual 6LE007488A), then resume the test procedure from the start.
- **If the lock is damaged or oxidised,** replace it (see Chapter 6.25, Accessory for locking the circuit breaker in OFF by OLK keylock).

If the problem persists, contact your Hager representative or local Hager technical support (contact details can be found on the Hager website for your country).

	Action	Illustration
14	Circuit breaker closed, check that the key cannot be removed without the push button is held down and the key is returned to the upright position.	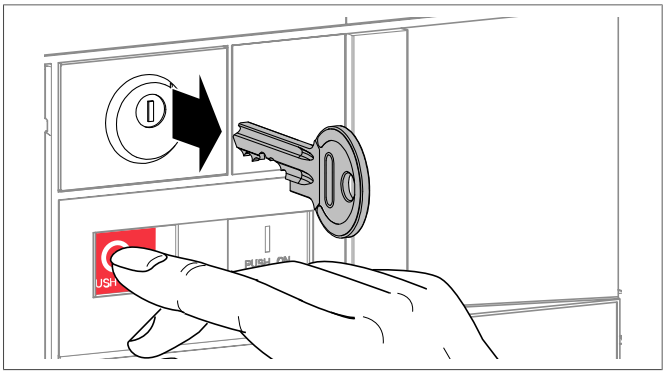

❷ Checking the circuit breaker locking in the OFF position using OLP padlocks

	Action	Illustration
1	If the circuit breaker is equipped with a UV or UV2 undervoltage release coil, power it to 100% of Vn, min (for example for a 380-480 V coil, Vn min = 380 V) or remove it from the product (see Chapter 6.15, UV undervoltage release coil).	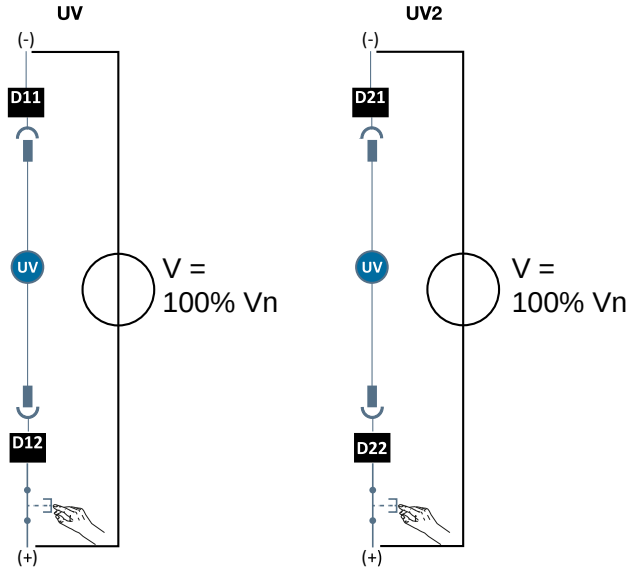
2	Charge the closing spring using the charging handle until the following indicators appear.	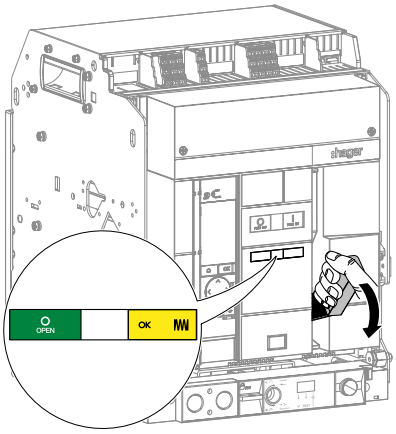
3	Press the opening push button and, while holding it down, pull the tab of the locking device.	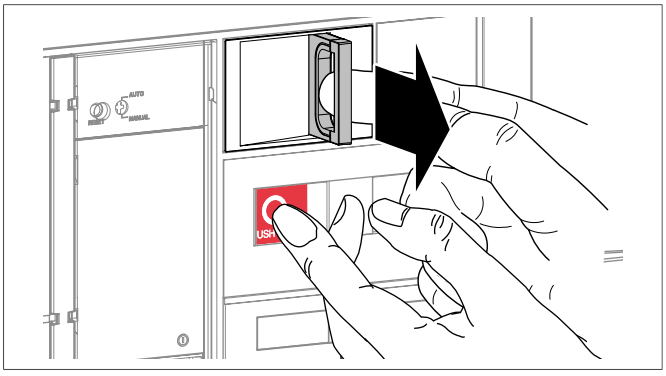

	Action	Illustration
4	Release the pressing on the opening push button while keeping the tab pressed...	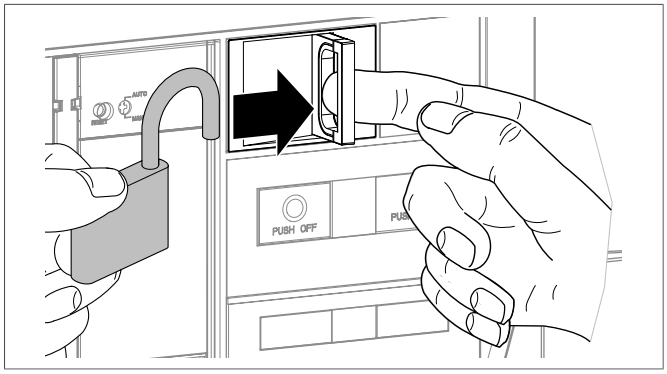
	then close the padlock.	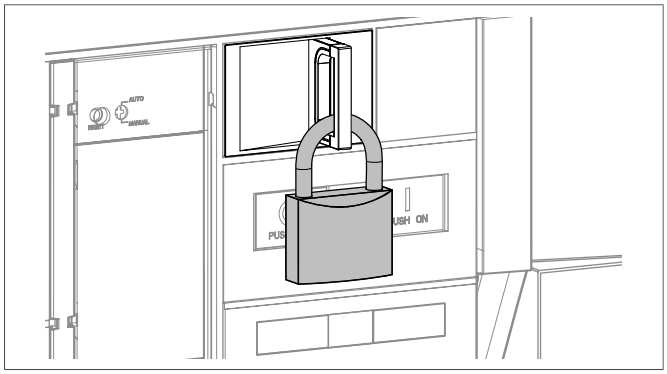

WHAT TO DO

- **If the locking device tab cannot be pulled out,** verify that the accessory is correctly installed (See Manual 6LE007876A), then resume the test procedure from the start.
- **If the accessory is damaged,** replace it (see Chapter 6.26, OLP Accessory for locking the circuit breaker in OFF by padlock).

	Action	Illustration
5	Check that it is no longer possible to close the circuit breaker by pressing the closing push button .	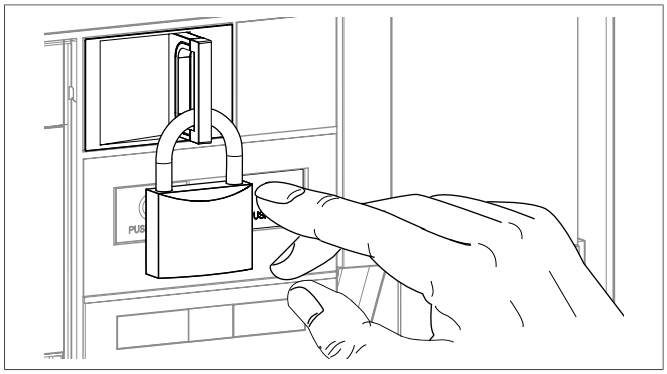

WHAT TO DO

- **If the circuit breaker closes,** verify that the accessory is correctly installed (See Manual 6LE007694A), then resume the test procedure from the start.
- **If the accessory is damaged,** replace it (see Chapter 6.26, OLP Accessory for locking the circuit breaker in OFF by padlock).

If the problem persists, contact your Hager representative or local Hager technical support (contact details can be found on the Hager website for your country).

	Action	Illustration
6	To unlock the device, remove the padlock.	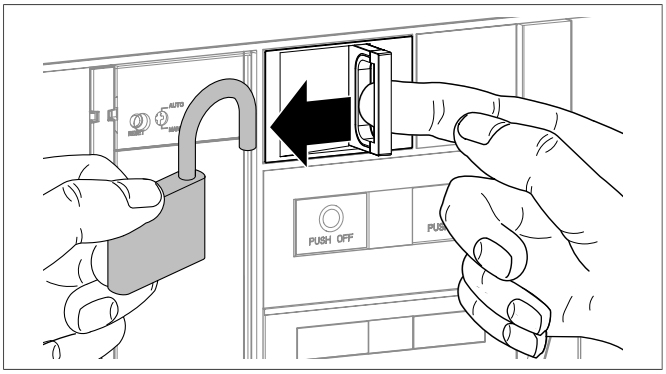
7	The tab returns to its initial position.	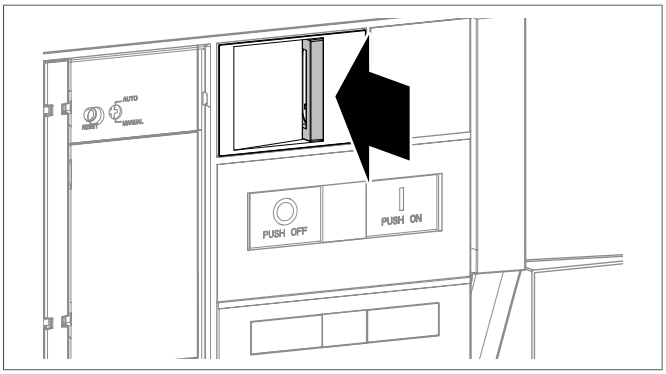

WHAT TO DO

If the locking device tab does not return to its original position, replace the accessory (see Chapter 6.26, OLP Accessory for locking the circuit breaker in OFF by padlock).

	Action	Illustration
8	Check that it is now possible to close the circuit breaker by pressing the closing push button I.	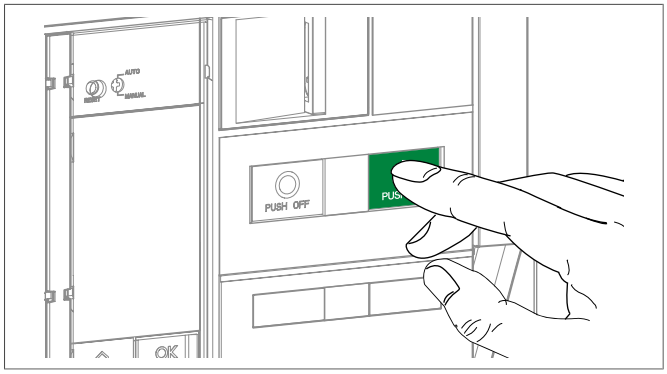

WHAT TO DO

- **If the circuit breaker doesn't close** verify that the accessory is correctly installed (See Manual 6LE007876A), then resume the test procedure from the start.
- **If the accessory is damaged,** replace it (see Chapter 6.26, OLP Accessory for locking the circuit breaker in OFF by padlock).

If the problem persists, contact your Hager representative or local Hager technical support (contact details can be found on the Hager website for your country).

	Action	Illustration
9	Circuit breaker closed, verify that the locking device tab cannot be removed without the push-button O being pressed in.	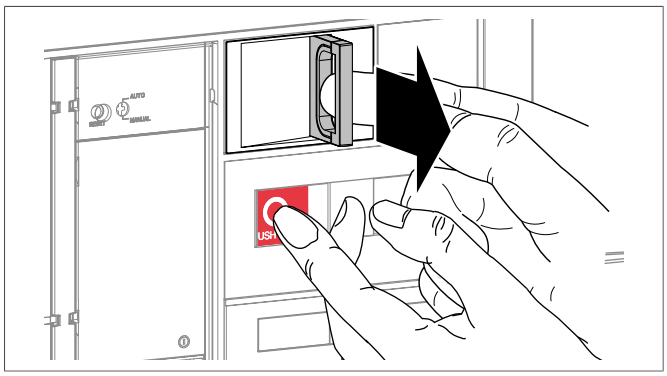

4.9 Checking the locking of the circuit breaker position in its CL chassis

Identify the type of chassis using the label on the side of the circuit breaker and the chassis.

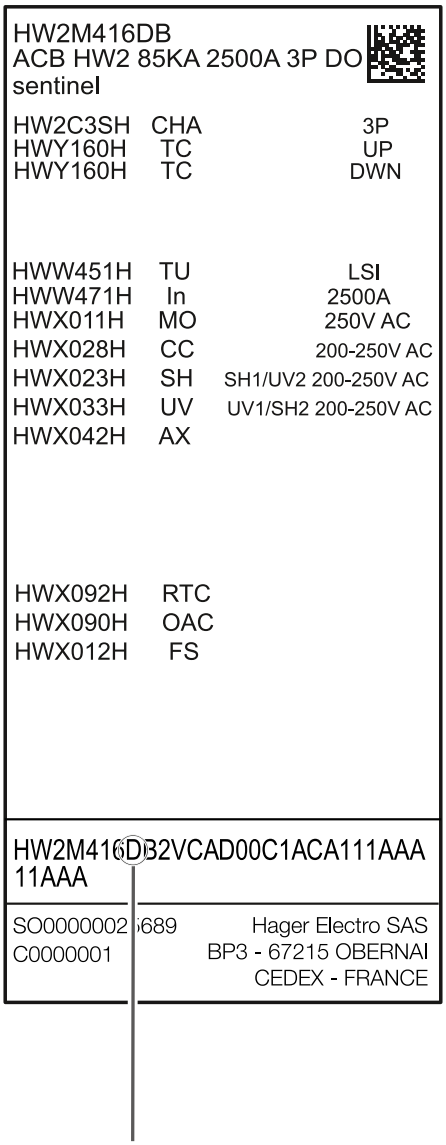

- If there is an **L** on the 8th digit, the chassis locking function is possible only in the Disconnected position.
- If there is a **D** on the 8th digit, the chassis locking function is possible in 3 positions: Connected, Test and Disconnected.

The circuit breaker must be in the following preliminary conditions:

Circuit breaker	Contacts	Closing spring	Position of the circuit breaker in the chassis
Withdrawable	Open	Discharged	Disconnected, Test or Connected according to the type of chassis

❶ Check of the interlocking of the circuit breaker position in its chassis using locks

For a chassis with 2 locks, reproduce the following instructions for each lock.

Information

If one or 2 locks are installed, a single key in the vertical position prevents the introduction of the racking handle into the racking-in/racking-out hole.

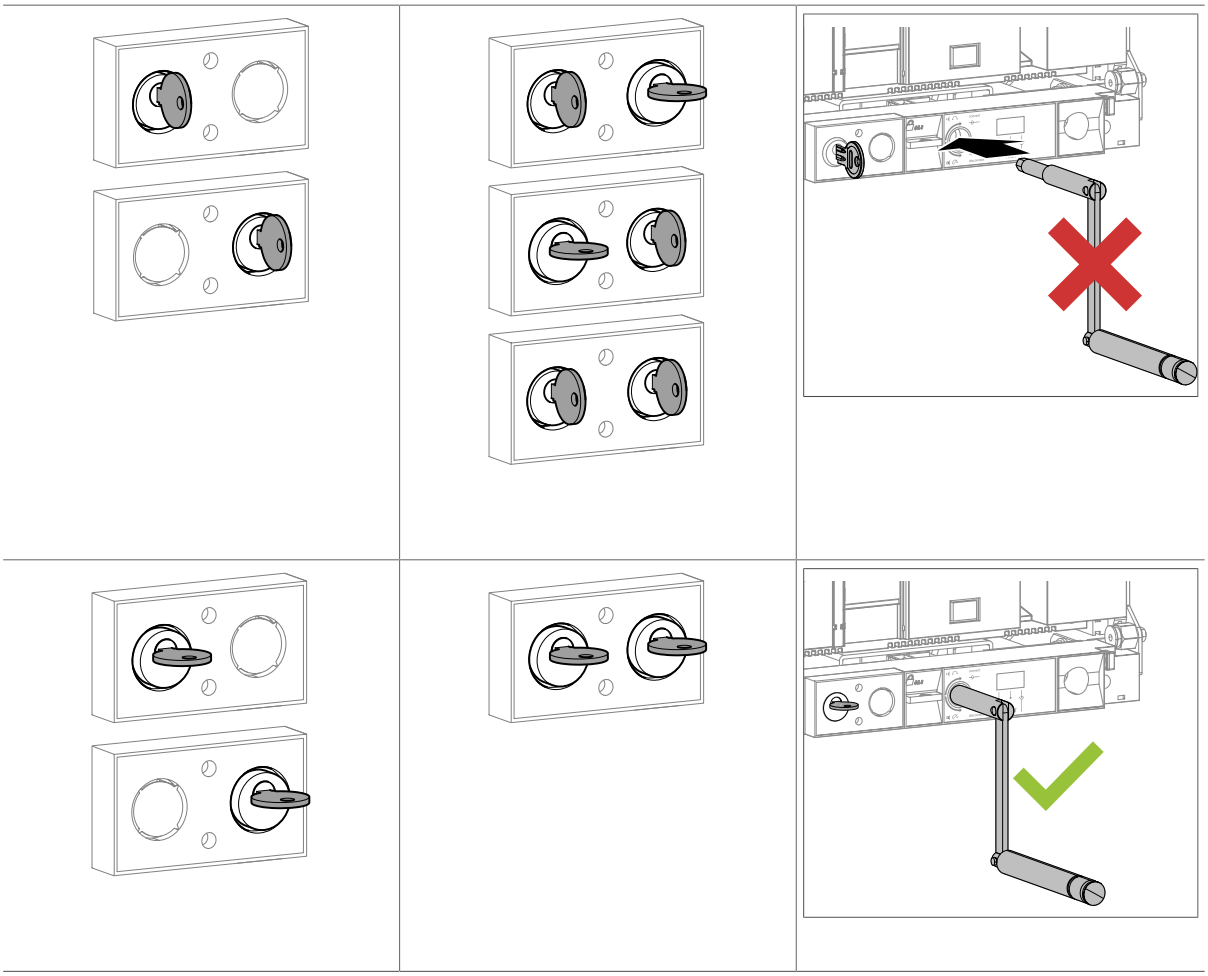

	Action	Illustration
1	Check that the keylock is in the vertical position.	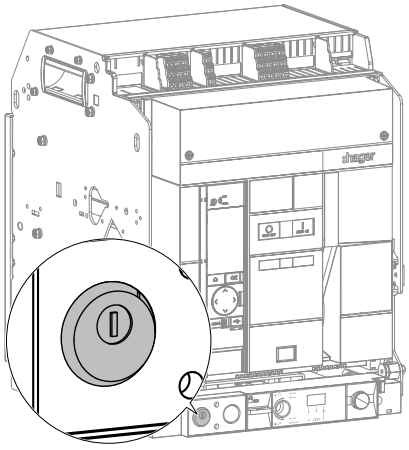

	Action	Illustration
2	Check to ensure that it is not possible to insert the racking handle into the racking-in/racking-out hole.	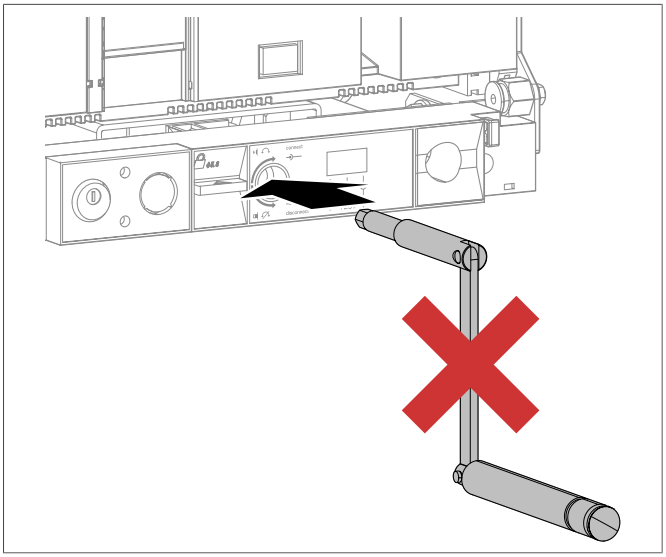

WHAT TO DO

If the racking handle can be inserted into the racking-in/racking-out hole, verify that the lock is correctly installed (See Manual 6LE007677A). If the lock is damaged or oxidised, replace it.

If the problem persists, contact your Hager representative or local Hager technical support (contact details can be found on the Hager website for your country).

3	Insert the key into the lock.	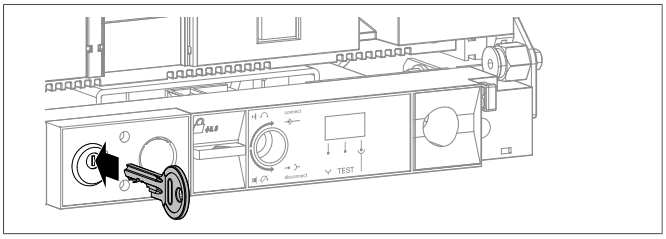

WHAT TO DO

If the key is missing or broken, replace the lock (See Manual 6LE007677A).

4	Key inserted in vertical position,	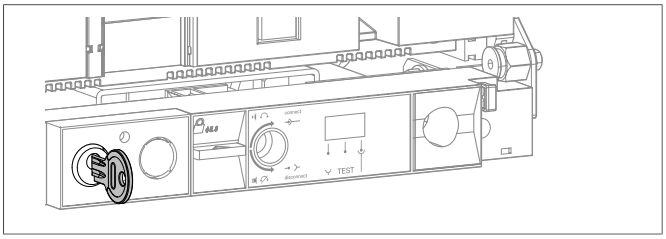

	Check to ensure that it is not possible to insert the racking handle into the racking-in/racking-out hole.	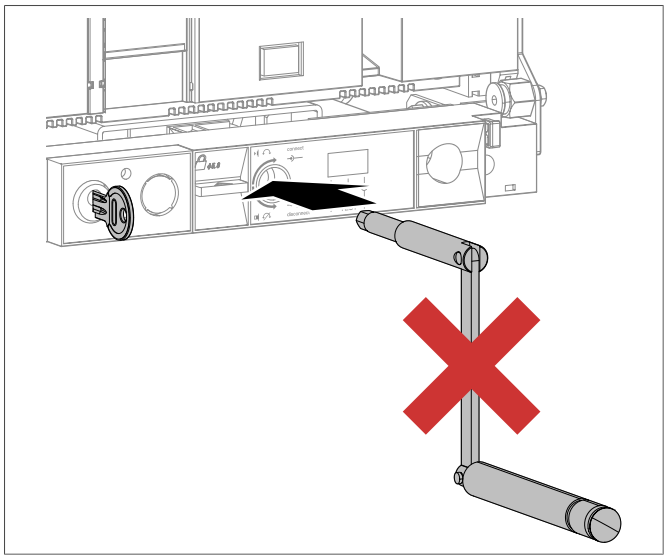

WHAT TO DO

If the racking handle can be inserted into the racking-in/racking-out hole, verify that the lock is correctly installed (See Manual 6LE007677A). If the lock is damaged or oxidised, replace it, then restart the test procedure from the beginning.

If the problem persists, contact your Hager representative or local Hager technical support (contact details can be found on the Hager website for your country).

	Action	Illustration
5	Verify that the racking handle is not already inserted in the racking-in/racking-out hole, then turn the key of the locking device clockwise...	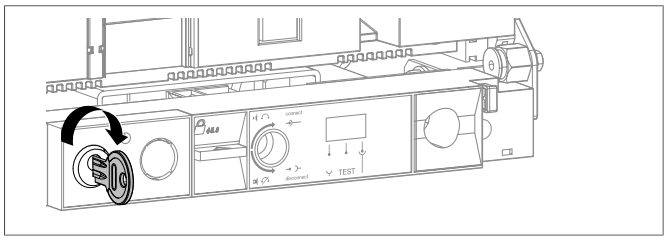
	to put it in the horizontal position.	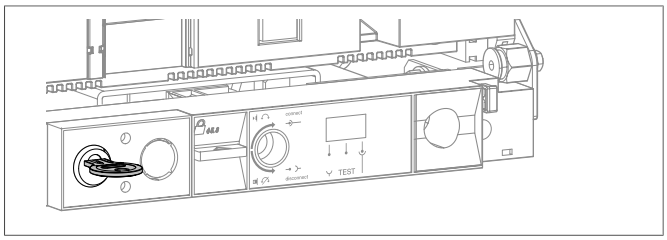

WHAT TO DO

If the key doesn't turn, verify that the chassis is in the Disconnected position (L-type chassis) and turn the key again.

If the problem persists, replace the lock (See Manual 6LE007677A).

	Action	Illustration
6	Check that it is now possible to insert the racking handle into the racking-in/racking-out hole.	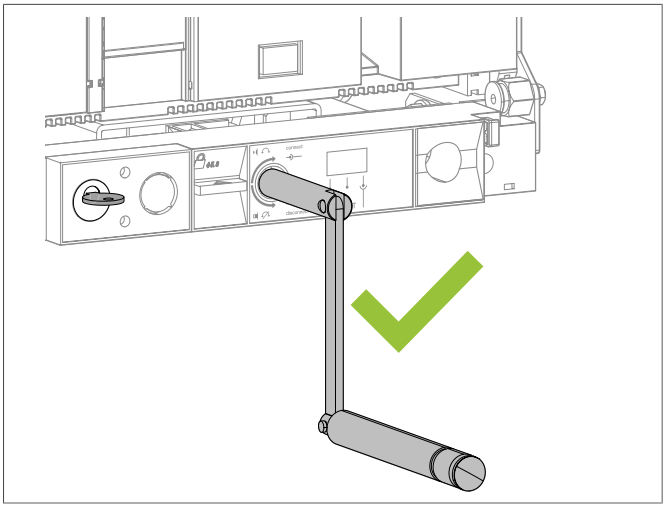

WHAT TO DO

If the racking handle cannot be inserted into the racking-in/racking-out hole, verify that the lock is correctly installed (See Manual 6LE007677A). If the lock is damaged or oxidised, replace it, then restart the test procedure from the beginning.

If the problem persists, contact your Hager representative or local Hager technical support (contact details can be found on the Hager website for your country).

7	Remove the racking handle from the racking-in/racking-out hole. The key remains locked in the lock. To remove it, turn the key anti-clockwise... until it is in the vertical position. Redo the entire test if there is a 2nd lock installed.	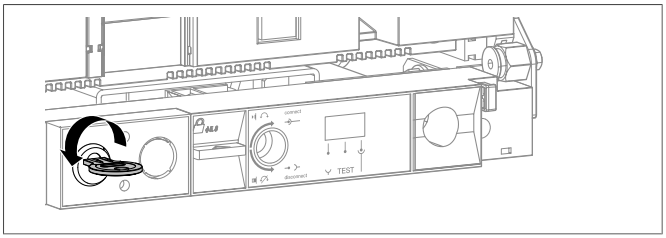 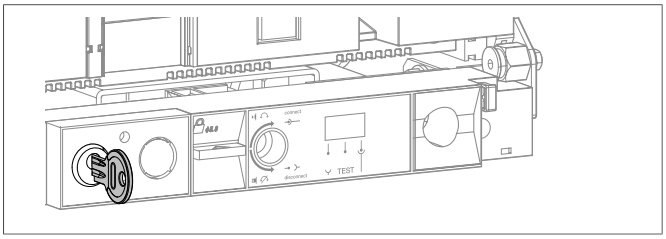 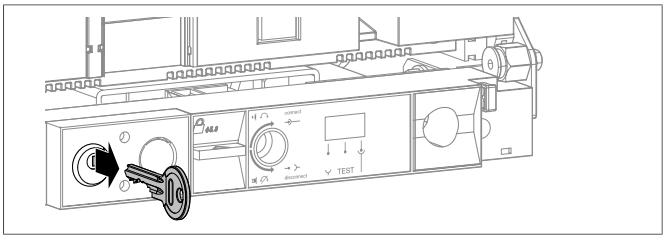

WHAT TO DO

If the key doesn't turn, replace the lock (See Manual 6LE007677A).

❷ Checking the locking of the circuit breaker position in its chassis using padlocks

	Action	Illustration
1	Verify that the racking handle is not already inserted into the racking-in/racking-out hole, then pull the locking and position acknowledgement tab.	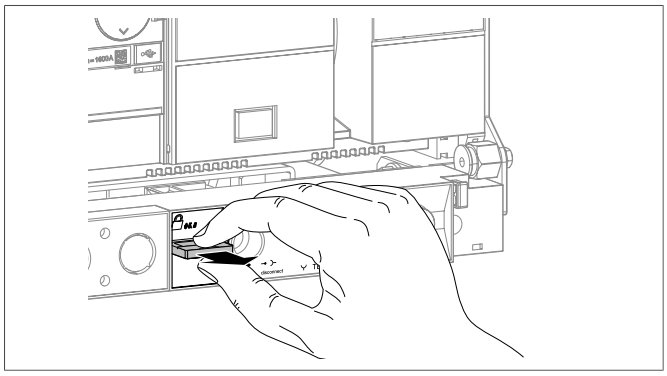

WHAT TO DO

If the padlocking and position acknowledgement tab cannot be pulled out, contact your Hager representative or local Hager technical support (contact details can be found on the Hager website for your country).

	Action	Illustration
2	Position the padlock on the tab...	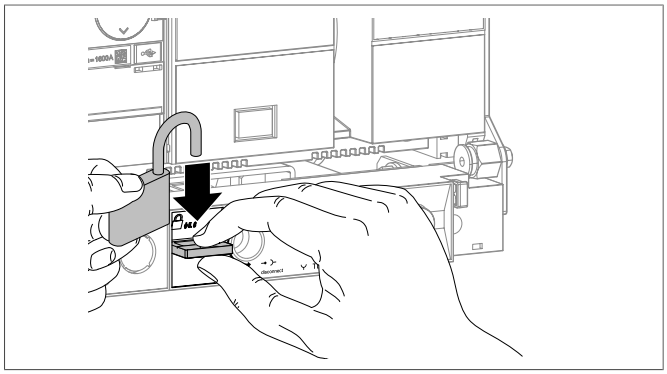
	then close it.	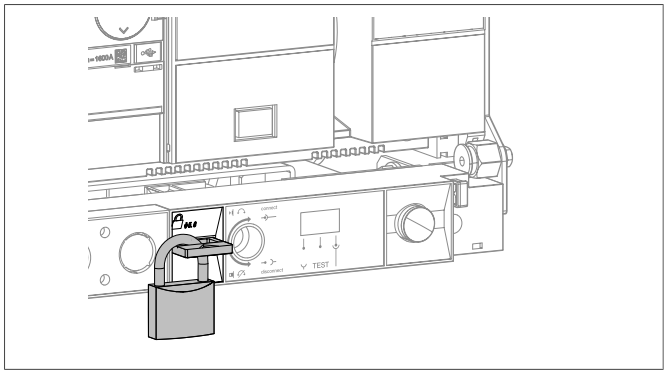

	Action	Illustration
3	Check to ensure that it is not possible to insert the racking handle into the racking-in/racking-out hole.	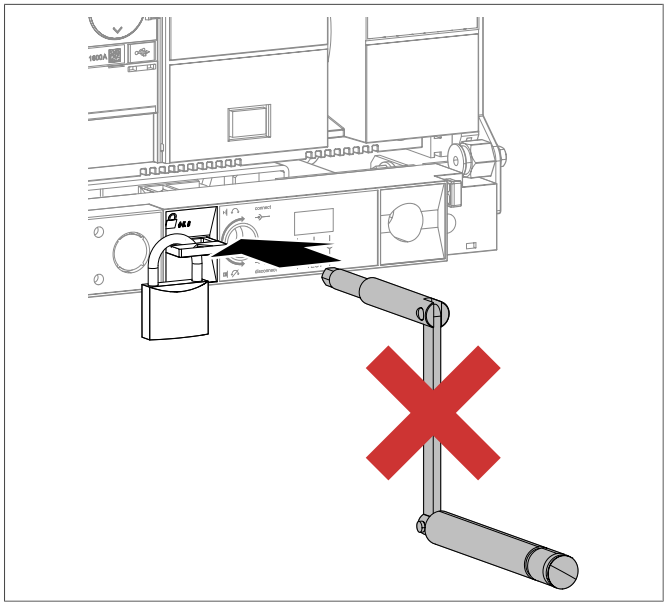

WHAT TO DO

If the racking handle can be inserted into the racking-in/racking-out hole, contact your Hager representative or local Hager technical support (contact details can be found on the Hager website for your country).

	Action	Illustration
4	To unlock the device, remove the padlock.	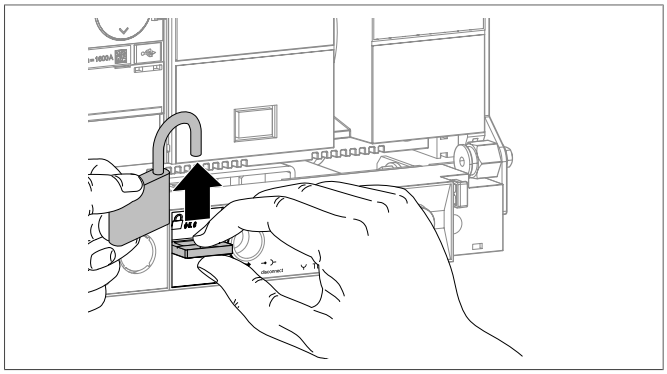
5	Check that the padlocking and position acknowledgement tab returns to its initial position.	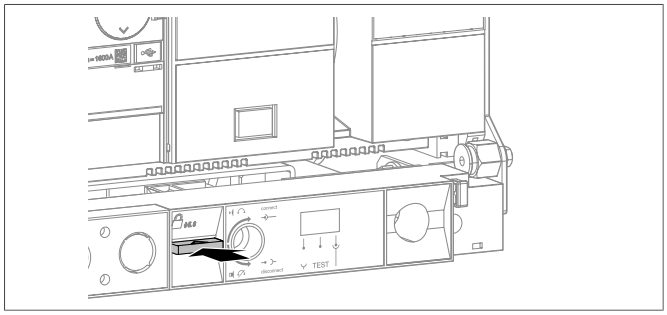

WHAT TO DO

If the padlocking and position acknowledgement tab does not retract fully, contact your Hager representative or local Hager technical support (contact details can be found on the Hager website for your country).

	Action	Illustration
6	Check that it is now possible to insert the racking handle into the racking-in/racking-out hole.	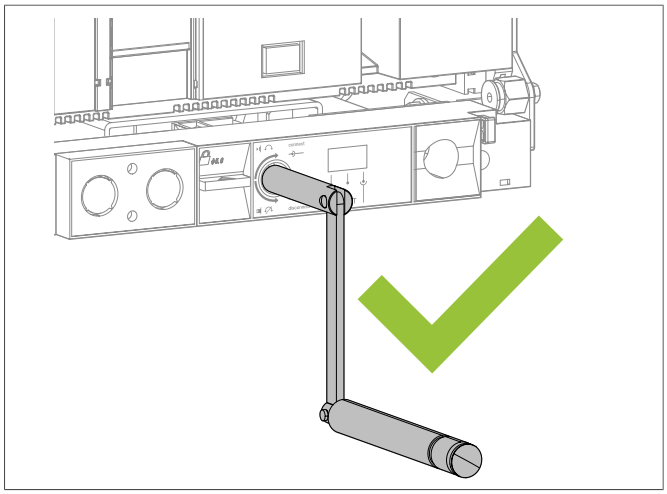

WHAT TO DO

If the racking handle cannot be inserted into the racking-in/racking-out hole, contact your Hager representative or local Hager technical support (contact details for your country can be found on the Hager website).

4.10 Checking the MI mechanical interlocking

The circuit breaker must be in the following preliminary conditions:

Circuit breaker	Contacts	Closing spring	Position of the circuit breaker in the chassis
Fixed	Open	Discharged	-
Withdrawable	Open	Discharged	Connected

Carry out at least one switching cycle of the interlocking mechanism to verify that it works correctly in all situations (see manual 6LE007624A or 6LE008138A).

WHAT TO DO

If the interlock device doesn't work correctly, contact your Hager representative or local Hager technical support (contact details for your country can be found on the Hager web-site).

Information

The MI mechanical interlock system must be subject to Standard preventive maintenance every year or every 1000 opening/closing cycles.

4.11 Visual check of the electronic trip unit

❶ Visual check of the electronic trip unit

The circuit breaker must be in the following preliminary conditions:

Circuit breaker	Contacts	Closing spring	Position of the circuit breaker in the chassis
Fixed	Open	Discharged	-
Withdrawable	Open	Discharged	Connected

	Action	Illustration
1	Open the transparent cover and check the condition of the display, the coding wheels, the key →OK on a sentinel trip unit,	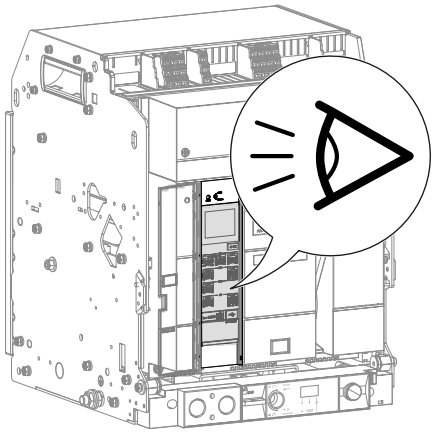
	and the entire keyboard on a sentinel Energy trip unit.	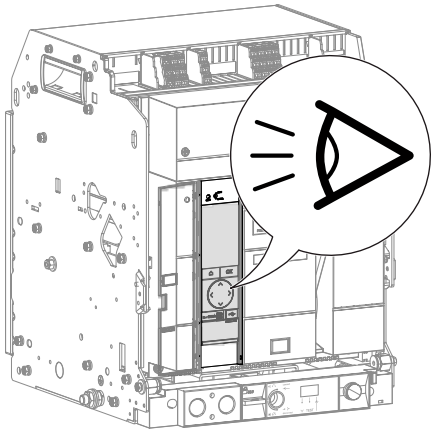

WHAT TO DO

If there is damage, (screen damaged, dial damaged or unable to turn, battery hatch damaged…) **on the electronic trip unit**, contact your Hager representative or local Hager technical support (contact details for your country can be found on the Hager website).

	Action	Illustration
2	Connect a PC that is equipped with **Hager Power set-up** software to the USB-C socket of the electronic trip unit in order to power it.	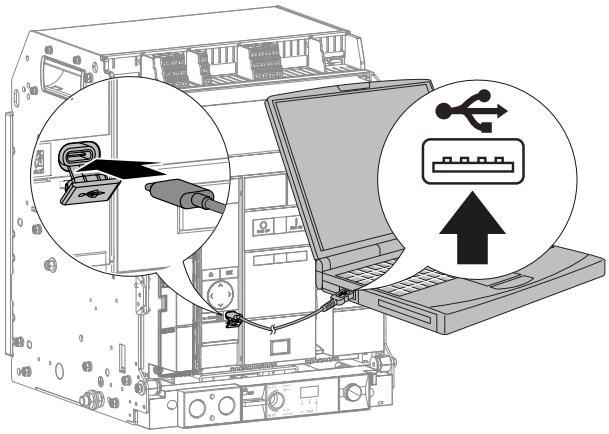
3	On a **sentinel trip unit,** verify that the ReadyToProtect indicator is displayed. On a **sentinel Energy trip unit,** verify that the screen briefly displays the message: hager and that the indicator ReadyToProtect lights up.	 Fig. 3: sentinel and sentinel Energy trip unit (1) ReadyToProtect indicator
4	Verify that no indicator other than the ReadyToProtect indicator is displayed, such as an error indicator, maintenance indicator or battery low or absent indicator.	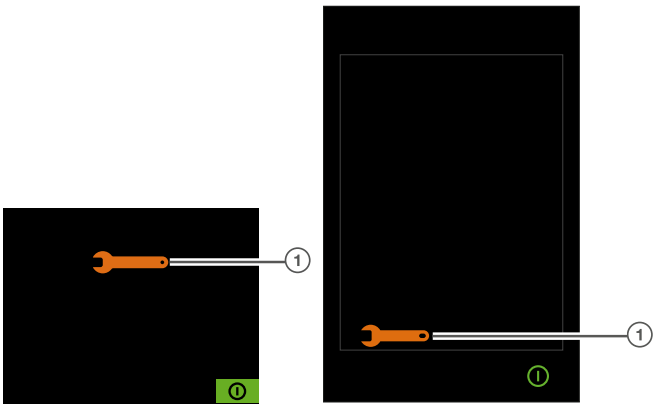 Fig. 4: sentinel and sentinel Energy trip unit (1) Maintenance indicator

	Action	Illustration
	If the low or missing battery indicator flashes, replace the backup battery (see Chapter 6.8, Backup battery for electronic trip unit).	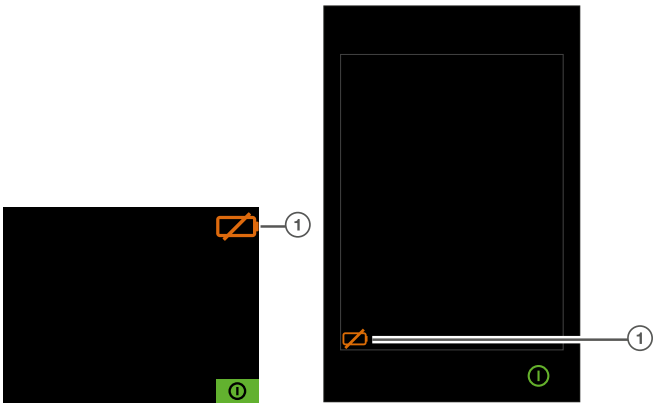 Fig. 5: sentinel and sentinel Energy trip unit 1 Low or missing battery indicator

WHAT TO DO

If any other error indicators appear or the ReadyToProtect indicator does not appear, refer to the Troubleshooting Guide6LE009769A.

❷ Local tripping and reset of the trip unit

The circuit breaker must be in the following preliminary conditions:

Circuit breaker	Contacts	Closing spring	Position of the circuit breaker in the chassis
Fixed	Open	Discharged	-
Withdrawable	Open	Discharged	Test

	Action	Illustration
1	Put the circuit breaker in the Test position.	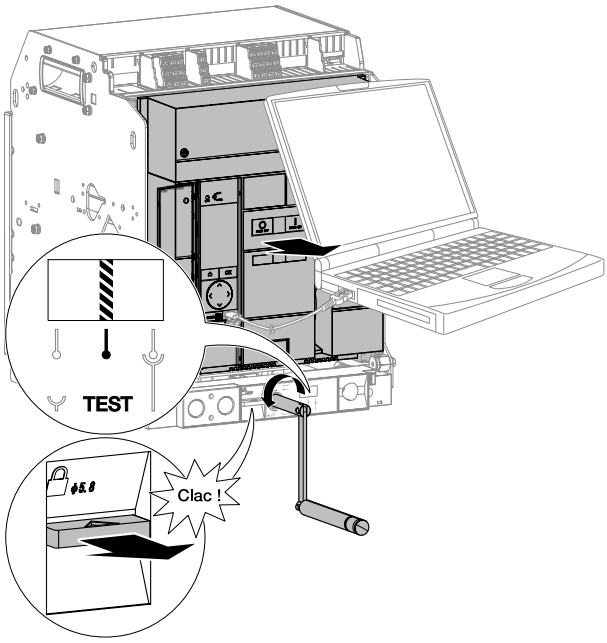
2	If the circuit breaker is equipped with a UV or UV2 undervoltage release coil, power it to 100 % of Vn, min (for example for a 380-480 V coil, Vn min = 380 V) or remove it from the product (see Chapter 6.15, UV undervoltage release coil).	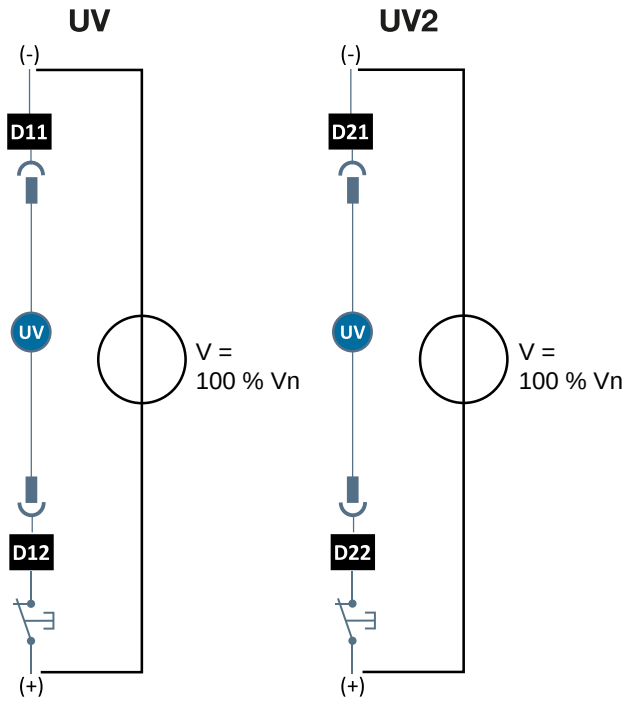

	Action	Illustration
3	Charge the closing spring using the charging handle until the following indicators appear.	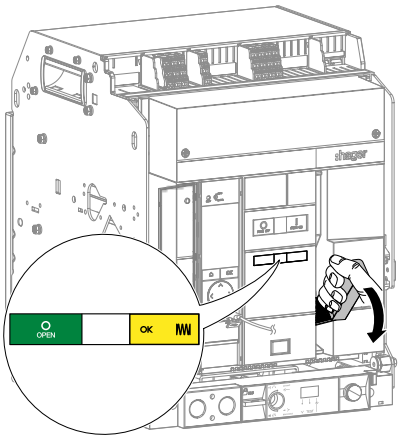
4	Close the circuit breaker by pressing the closing push button .	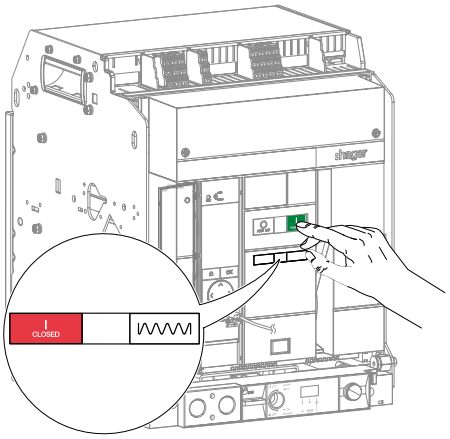
5	Go to the Settings/Configuration menu in the **Hager Power setup** application, verify the date and time and change it if necessary. Then go to the test menu and initiate an electro-mechanical trip command.	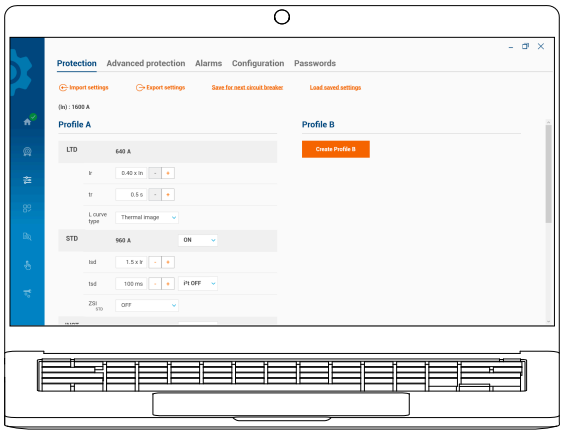

	Action	Illustration
6	Verify that the circuit breaker opens and that the “Test” trip message flashes on the sentinel trip unit,	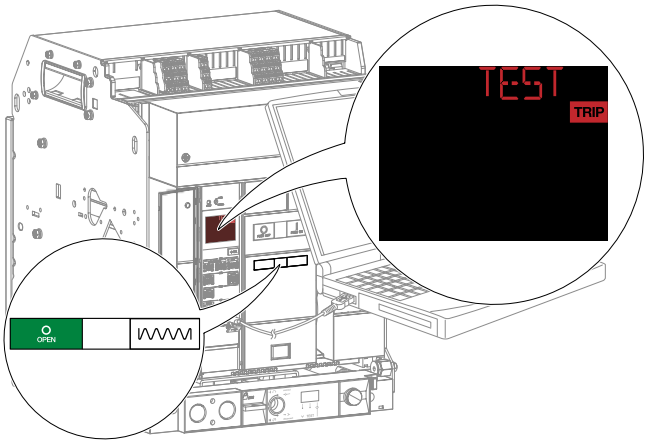
	or the sentinel Energy trip unit.	
	Verify that the indicators signal that the circuit breaker is open and that the closing spring is discharged.	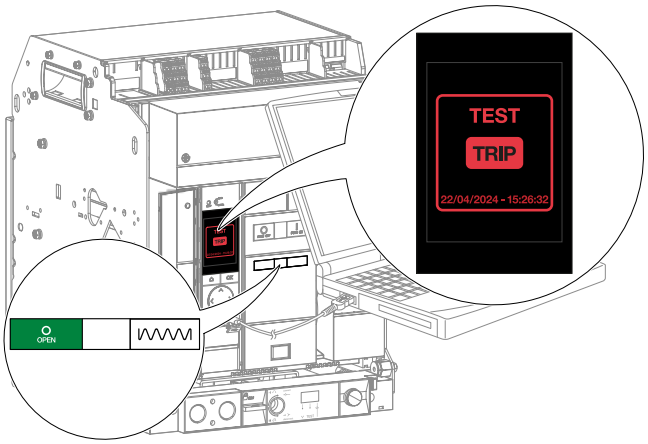

WHAT TO DO

If the circuit breaker does not open, replace the circuit breaker.

	Action	Illustration
7	If an FS fault trip contact is connected to an external trigger signalling circuit, verify that the lamp lights up.	
8	If an FS fault trip contact is not connected to an external trigger signalling circuit, verify using an ohmmeter: - The continuity between terminals F11 and F12, - and the non-continuity between the terminals F11 and F14. If the circuit breaker is fitted with a 2nd and/or 3rdtrip fault contact FS, check using an ohmmeter: - Continuity between terminals F21 and F22 and/or F31 and F32	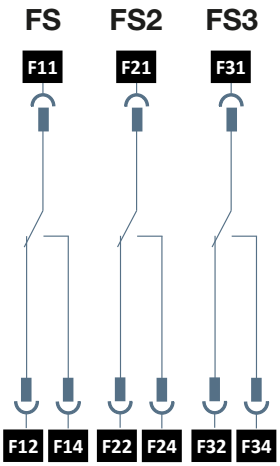

	Action	Illustration
	- The non-continuity between terminals F21 and F24 and/or F31 and F34.	
9	Charge the closing spring using the charging handle until the following indicators appear. Verify that the indicators signal that the circuit breaker is open and: • If the circuit breaker reset type is set to **MANUAL**, the closing spring is loaded but not ready to close. • If the circuit breaker reset type is set to **AUTO**, the closing spring is charged.	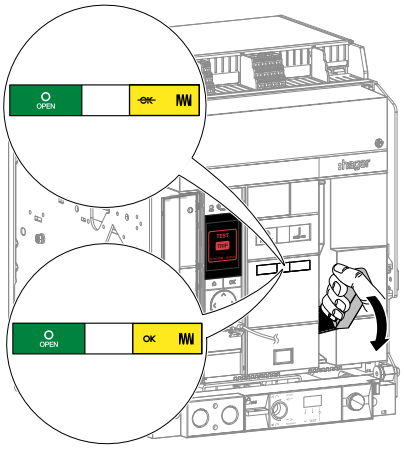
10	If the circuit breaker's reset type is set to **MANUAL**, press the RESET button. If the circuit breaker reset is set to **AUTO**, move on to the next instruction.	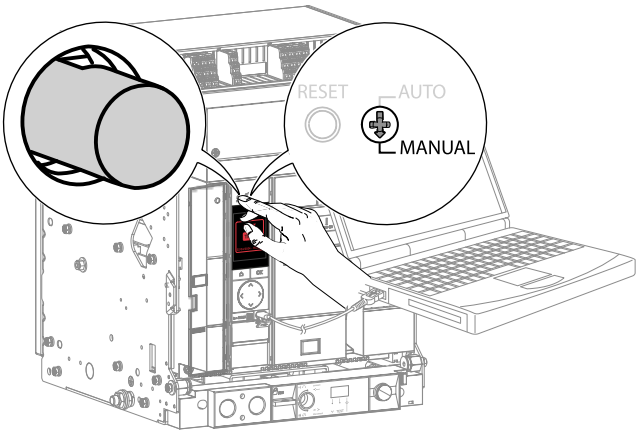
11	Verify that the indicators signal that the circuit breaker is closed and that the closing spring is charged.	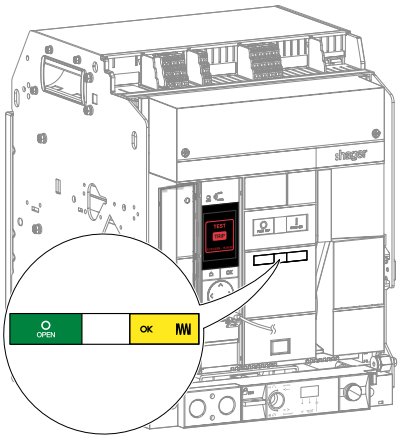

	Action	Illustration
12	Close the circuit breaker by pressing the closing push button .	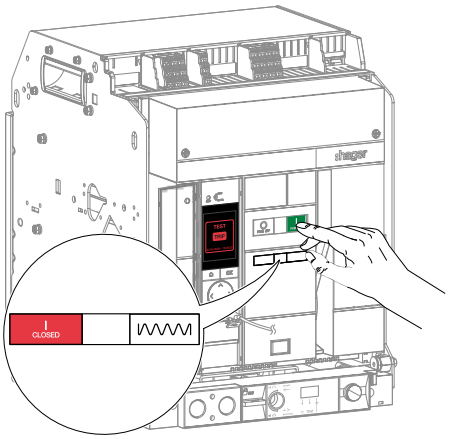
13	If one or more FS fault trip contacts are not connected to an external trigger signalling circuit, verify using an ohmmeter: - the continuity between the terminals: F11 and F14, F21 and F24 and/or F31 and F34 - and the non-continuity between the terminals: F11 and F12, F21 and F22 and/or F31 and F32.	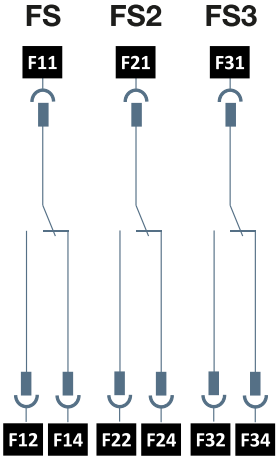
14	Verify that the tripping test is recorded in the event log in the software **Hager Power setup.**	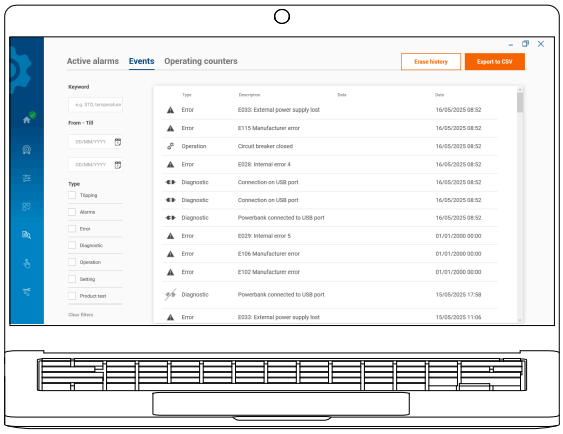

	Action	Illustration
15	Acknowledge the “TEST” trigger message on the trip unit by briefly pressing the button →OK on the sentinel trip unit or OK on the sentinel Energy trip unit. The ‘TEST’ trip message stops flashing and becomes stable. **For more than 3 seconds** press the button →OK of the sentinel trip unit or OK of the sentinel Energy trip unit, to turn off the display.	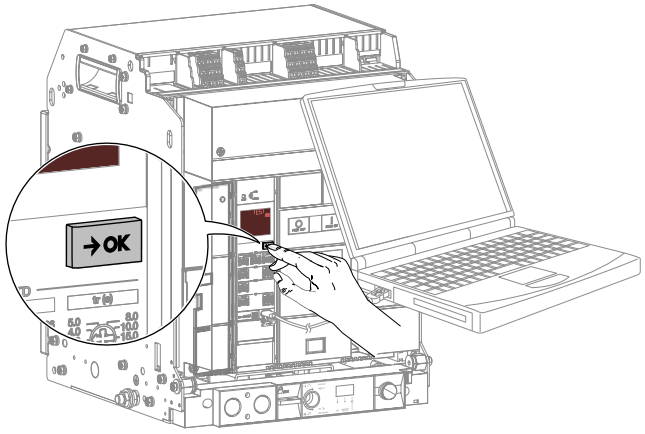 Fig. 6: sentinel trip unit 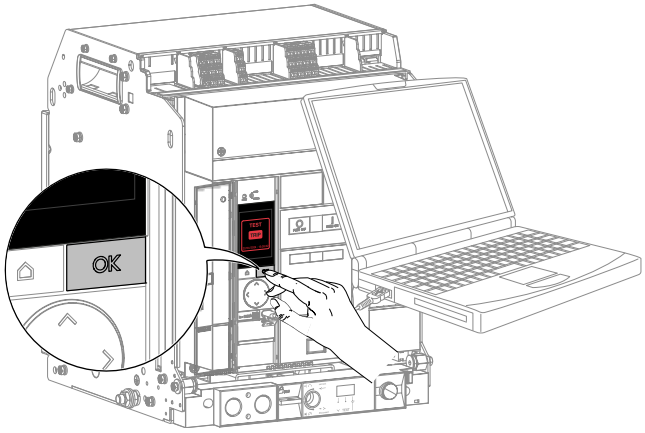 Fig. 7: sentinel Energy trip unit

❸ Remote triggering and reset of the electronic trip unit

The circuit breaker must be in the following preliminary conditions:

Circuit breaker	Contacts	Closing spring	Position of the circuit breaker in the chassis
Fixed	Closed	Discharged	-
Withdrawable	Closed	Discharged	Test

	Action	Illustration
1	Ensure that the circuit breaker reset type is set to **AUTO**.	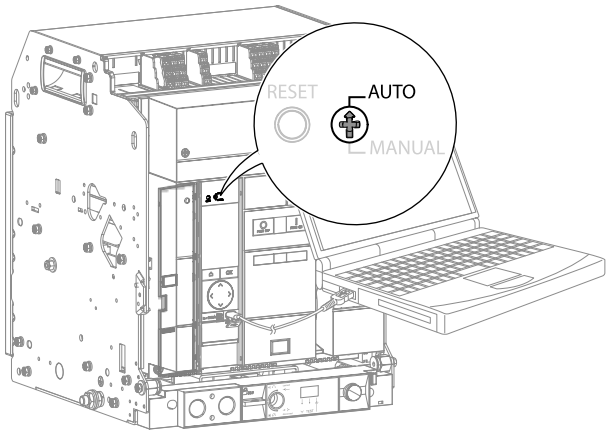
2	If a push-button allowing remote acknowledgement is connected to the RR/DI input (See Installation manual for HW2/HW4 6LE009367A), go to the software **Hager Power setup** and start an electromechanical trip test.	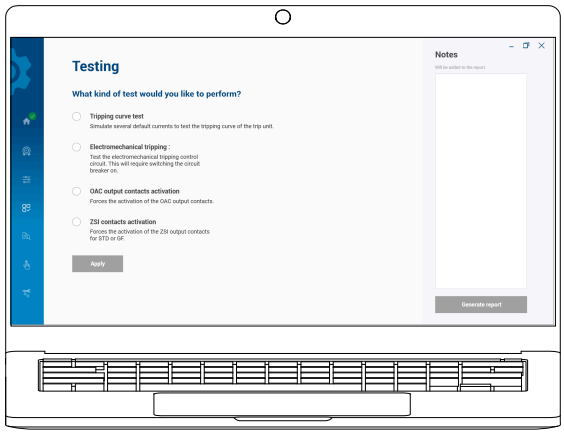
3	Verify that the circuit breaker opens and that the 'Test' trigger message flashes on the sentinel trip unit,	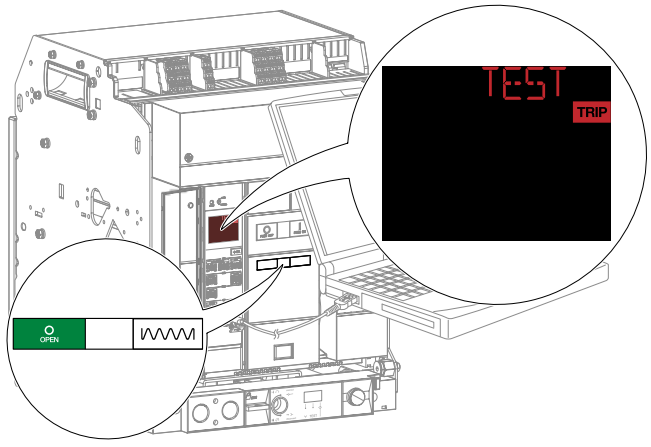

	Action	Illustration
3	*(continued)* or the sentinel Energy trip unit. Verify that the indicators signal that the circuit breaker is open and that the closing spring is discharged.	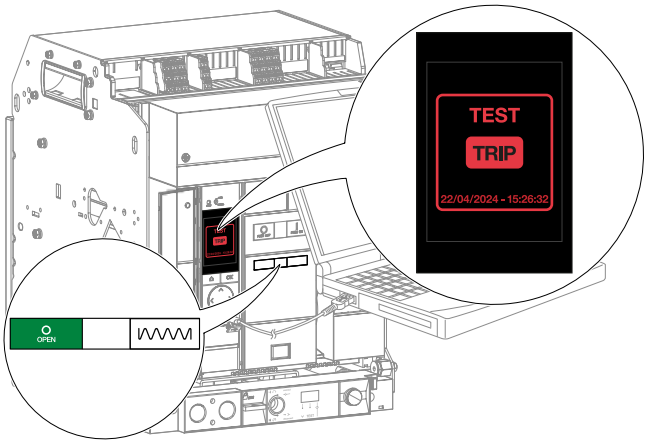
4	Press the control button controlling the RR/DI input, and verify that the ‘Test’ trigger message disappears from the trip unit display and that the ReadyToProtect indicator is shown.	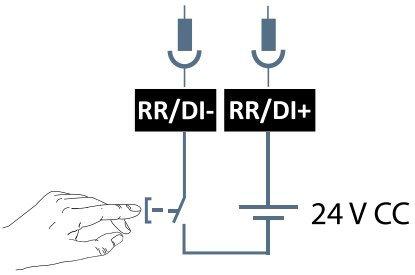 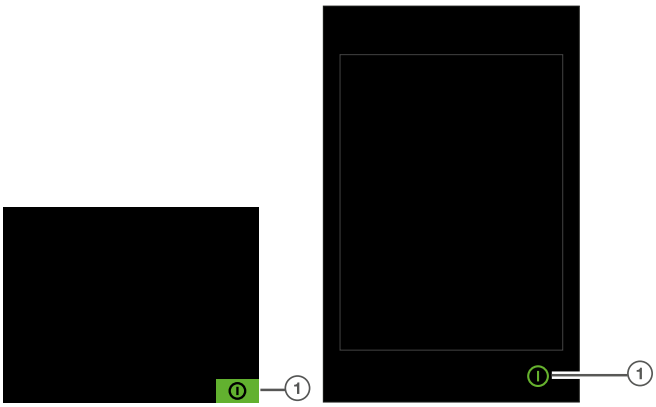 Fig. 8: sentinel and sentinel Energy trip unit (1) ReadyToProtect indicator

	Action	Illustration
5	Remove the PC equipped with the software **Hager Power setup** from the USB-C socket of the trip unit, then close the transparent cover.	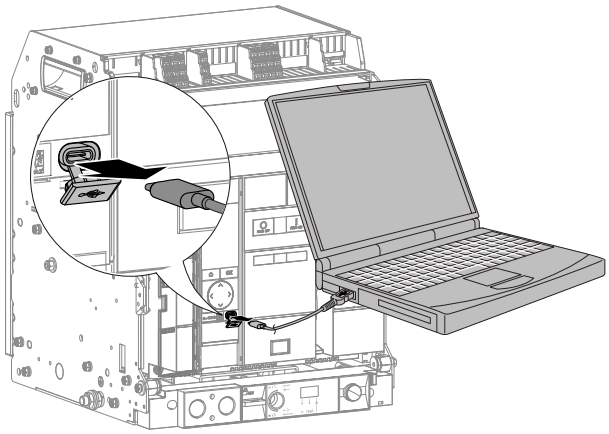

5 Maintenance operations overview

5.1 Standard and Advanced preventive maintenance



Danger

Risk of electric shock or arc flash.
Risk of death, risk of injury from electric shock, or risk of serious injury.

Hager strongly recommends that the Standard and Advanced maintenance programmes are performed only by persons trained and authorised by Hager.

For any additional information, contact your Hager representative or local Hager technical support (contact details for your country can be found on the Hager website).

This chapter gives a non-exhaustive overview of the operations to be carried out in the Standard and Advanced preventive maintenance programmes.

Reminder:

Standard preventive maintenance: intended to preserve the operational safety of the circuit breaker while maintaining a consistent level of quality. It includes performing test, measurements and any maintenance or repair activity, as well as the replacement of any faulty parts. During the first meeting it is important to determine the actual operation conditions of the circuit breaker and its operating state in order to plan and carry out regular maintenance in agreement with the customer, for example every 2 years.

Advanced preventive maintenance: intended to restore the circuit breaker to an almost new state in order to prolong its lifespan. It can be carried out during planned maintenance, in agreement with the customer, regardless of the actual state of the circuit breaker or any previous faults it may have had. It is particularly useful after years of operation, particularly for parts that have been subject to strong wear and tear. The latter are replaced on a preventive basis, before an irreversible breakdown or complete destruction of the circuit breaker occurs, for example if the chassis jaw contacts already show strong wear and tear.

Points to be checked	No.	Description	Standard preventive maintenance	Advanced preventive maintenance
Maintenance of the circuit breaker panel	❶ **Circuit breaker environmental conditions**	Verify that the environmental installation conditions are compliant. Measure the temperature of the powered parts of the circuit breaker.	■	■
	❷ **Missing parts**	Verify that there are no missing or damaged parts on the front of the circuit breaker: • Front cover with screws • Neutral pole cover	■	■

Points to be checked	No.	Description	Standard preventive maintenance	Advanced preventive maintenance
(continued) Maintenance of the circuit breaker panel		• Push buttons for opening and closing the contacts • Closing spring and contact status indicators • Charging handle • Transparent cover • Circuit breaker's technical specification and identification labels Replace the missing or damaged parts.		
	❸ **Visible signs of damage or wear on a fixed circuit breaker**	Verify that there are no signs of damage or wear on the connecting bars or any other parts of the circuit breaker. Verify that no dust has accumulated inside the circuit breaker. Remove dust with the recommended cleaning tools.	■	■
	❹ **Visible signs of damage or wear on a drawout circuit breaker**	Verify that there are no signs of damage or wear on the connecting bars or any other parts of the circuit breaker. Perform a preventive replacement or repair as necessary. Verify that no dust has accumulated inside the circuit breaker or chassis. Remove dust with the recommended cleaning tools.	■	■
	❺ **Check of the insulation of the circuit breaker**	Use an insulation tester to verify the resistance of the insulation between: • the input and output terminals • the input/output terminals and the ground potential.	-	■
Maintenance of power connections	❶ **Checking the power connections on a fixed circuit breaker**	Measure the resistance of the power contacts phase by phase.	■	■
	❷ **Checking the power connections on a drawout circuit breaker**	Measure the resistance of the power contacts phase by phase.	■	■

Points to be checked	No.	Description	Standard preventive maintenance	Advanced preventive maintenance
Maintenance of the chassis and the drawout part	1 **Moving from the Connected position to the Test position**	Verify the change from the Connected position to the Test position. Verify that the mechanical position indicator and the padlocking and position acknowledgement tab work correctly. Verify the opening of the circuit breaker.	■	■
	2 **Moving from the Test position to the Disconnected position**	Verify the change from the Test position to the Disconnected position. Verify that the mechanical position indicator and the padlocking and position acknowledgement tab work correctly. Verify the proper removal and insertion of the circuit breaker from and into the chassis.	■	■
	3 **Moving from the Disconnected position to the Test position**	Verify the change from the Disconnected position to the Test position. Verify that the mechanical position indicator and the padlocking and position acknowledgement tab work correctly.	■	■
	4 **Moving from the Test position to the Connected position**	Verify the change from the Test position to the Connected position. Verify that the mechanical position indicator and the padlocking and position acknowledgement tab work correctly. Verify the opening of the circuit breaker.	■	■
	5 **Check the RI open-door racking interlock accessory**	Check to ensure that it is not possible to insert the racking handle into the place to insert/withdraw when the electrical cabinet door is open.	■	■
	6 **Removing the circuit breaker**	Verify the proper removal of the circuit breaker from the chassis.	■	■
	7 **Check for cleanliness and presence of grease**	Check that the interior of the chassis is in good condition and clean. If dust is present, clean it. Clean the position sensor for COM (PSE). Check the condition of the lubricant and ensure it is applied uniformly to essential places.	■	■
	8 **Check the insulating safety shutters**	Verify that the insulating safety shutters are in good condition and function correctly.	■	■

Points to be checked	No.	Description	Standard preventive maintenance	Advanced preventive maintenance
(continued) Maintenance of the chassis and the drawout part	9 **Check of the contact clamps**	Take out, check and re-lubricate the contacts clusters.	■	■
	10 **Check of the general condition of the moving part**	Verify that there are no signs of damage or wear on the moving part. Clean the moving part and the position sensor for COM (PSE).	■	■
	11 **Check of the jaw contacts**	Check the tightness of the screws in the jaw contacts. Verify that there are no signs of damage or wear on the jaw contacts. Verify the depth of penetration of the jaw contacts into the contacts clusters. Check the condition of the lubricant and ensure it is applied uniformly to the jaw contacts.	■	■
	12 **Re-lubrication of the chassis**	Remove all of the lubricant from the essential places of the chassis and re-lubricate	-	■
Maintenance of the arc chambers	1 **External check of the arc chambers**	Verify that there are no signs of damage on the exterior of the air chambers. Verify that all the screws on the air chambers are present.	■	■
	2 **Cleaning the filters and checking the arc chambers**	Clean the filters of the air chambers. Verify that the separation plates are in good condition and clean them. Replace the air chambers if the separation plates are damaged.	■	■
	3 **Checking the arc chambers**	Check and clean inside the air chambers.	■	■
Maintenance of the main contacts		Do a visual check on the condition of the fixed and mobile contacts. Check the wear on the contacts.	■	■
Maintenance of the opening and closing mechanism	1 **Check of the mechanism**	Check the wear on the mechanism springs. Verify the condition (dust, lubricant, etc.) of the closing spring charging mechanism.	■	■
	2 **Closing and locking of the circuit breaker contacts**	Once the circuit breaker is closed, check that it does not open when the closing spring is being charged using the charging handle. Verify that the CYC cycle counter is working properly.	■	■

Points to be checked	No.	Description	Standard preventive maintenance	Advanced preventive maintenance
(continued) Maintenance of the opening and closing mechanism	3 **Checking the MO spring charging motor**	Verify that the MO spring charging motor works properly. Check the continuity between the terminals of the motor. Verify the closing spring charging time at 85 % of Vn min.	■	■
Maintenance of the coils and auxiliary contacts	1 **Closing of the circuit breaker using a CC closing coil**	Using an external adjustable power supply and a push button, verify that the CC closing coil works correctly at 85 % of Vn min. Verify that the CC closing coil works properly with the original control circuit.	■	■
	2 **Opening the circuit breaker using an SH shunt trip coil**	Using an external adjustable power supply and a push button, verify that the SH shunt trip coil works correctly at 85 % of Vn. Verify that the SH shunt trip coil works properly with the original control circuit.	■	■
	3 **Opening the circuit breaker using a UV undervoltage release coil**	Verify that the UV undervoltage release coil works properly with the original control circuit. Using an external adjustable power supply and a push button, verify that the UV undervoltage release coil works correctly at different % of Vn.	■	■
	4 **Opening of the circuit breaker using a UVTC time controller for undervoltage release coil**	Using an external variable power supply and a chronometer, verify that the circuit breaker opens at the end of the time period set on the time controller at 35 % and 85 % of Vn.	■	■
	5 **Check of the AX auxiliary contacts**	Use an ohmmeter to verify the continuity between the AX auxiliary contacts.	■	■
	6 **Check of the TB connection terminal blocks**	Verify that there are no signs of damage or wear on the cabling or terminal blocks.	■	■
Maintenance of the mechanical locking and interlocking systems	1 **Checking the circuit breaker's interlock in OFF using an OLK keylock**	Verify the interlocking of the circuit breaker using a lock.	■	■

Points to be checked	No.	Description	Standard preventive maintenance	Advanced preventive maintenance
(continued) Maintenance of the mechanical locking and interlocking systems	❷ **Checking the circuit breaker locking in the OFF position using OLP padlocks**	Verify the interlocking of the circuit breaker using a padlock.	■	■
	❸ **Check of the interlocking of the circuit breaker position in its chassis using locks**	Check the interlocking of the circuit breaker in the chassis using locks.	■	■
	❹ **Checking the locking of the circuit breaker position in its chassis using padlocks**	Verify the locking of the circuit breaker in the chassis using padlocks.	■	■
	❺ **Checking the MI mechanical interlocking**	Carry out at least one switching cycle of the interlocking mechanism to verify that it works correctly in all situations. Clean the interlocking plates and verify their condition visually. Inspect the interlocking cables. Check the functional space between the upper lever and the lever stop. Check for the presence of lubricant on the cam of the interlocking plates.	■	■

Points to be checked	No.	Description	Standard preventive maintenance	Advanced preventive maintenance
Electronic Trip Maintenance	1 **Visual check of the electronic trip unit**	Verify that the following are in good condition: the display, the dials, the OK button on a sentinel trip unit, and the entire keyboard on a sentinel Energy trip unit. Verify that the trip unit is operational and ready to perform its protection function. Verify that no error indicators or alarm messages are visible.	■	■
	2 **Local tripping and reset of the trip unit**	Initiate a tripping test using the Hager Power set-up software. Acknowledge the trip message on the trip unit. Verify that the tripping test is recorded in the event log in the application. Verify the switching of the FS trip fault contact.	■	■
	3 **Remote triggering and reset of the electronic trip unit**	Verify that remote acknowledgement works using the RR/DI input.	■	■
	4 **Test of the OAC outputs alarms contacts module**	Test the closing of the OAC alarms outputs contacts module using the Hager Power setup software.	■	■
	5 **Test of the Zone Selective Interlocking function (ZSI)**	Test the ZSI function using the Hager Power setup software.	■	■
	6 **Test of the trip curve**	Use the Hager Power setup software to: • Verify that the protection setting values displayed correspond to those defined in the commissioning documentation • Initiate a full test of the trip curve.	■	■
	7 **Check of the event log**	Use the Hager Power setup software to: • Verify the meters (On/Off, trips, alarms) as well as the trip events and faults. • ・Save the log.	■	■
	8 **Preventive replacement of the backup battery**	Verify the number of hours of operation using the Hager Power setup software.	■	■

Points to be checked	No.	Description	Standard preventive maintenance	Advanced preventive maintenance
(continued) Electronic Trip Maintenance		Replace the backup battery if it is more than 43,000 hours.		
	❾ **Reset of the maintenance parameters**	Reset the maintenance alarm and adjust it to the next maintenance date (to be carried out by persons authorised by Hager).	■	■
	❿ **Preventive replacement of the electronic trip unit**	Replace the trip unit after 15 years (to be performed by persons authorised by Hager).	-	■

5.2 Corrective maintenance after a short-circuit



Danger

Risk of electric shock or arc flash.
Risk of death, risk of injury from electric shock, or risk of serious injury.

Hager strongly recommends that after a short-circuit the corrective maintenance programme be performed only by persons **trained and authorised by Hager**.

For any additional information, contact your Hager representative or local Hager technical support (contact details for your country can be found on the Hager website).

This chapter gives a non-exhaustive overview of the operations to be carried out as per the corrective maintenance programme after a short circuit.

Reminder:

Corrective maintenance after a short circuit: This is necessary after each trip due to a short circuit fault. The maintenance indicator will appear on the screen and can only be reset after corrective maintenance has taken place. It includes performing visual checks, tests, measurements and any maintenance or repair activity, as well as the replacement of any faulty parts.

Points to be checked	No.	Description
Maintenance of the circuit breaker panel	❶ **Trouble-shooting of the short circuit**	Use the Hager Power setup software to look for the origin of the short circuit and apply the corrective measures needed.
	❷ **Missing parts**	Verify that there are no missing or damaged parts on the front of the circuit breaker: • Front cover with screws • Neutral pole cover • Push buttons for opening and closing the contacts • Closing spring and contact status indicators • Charging handle • Transparent cover • Circuit breaker's technical specification and identification labels Replace the missing or damaged parts.
	❸ **Visible signs of damage or wear on a fixed circuit breaker**	Verify that there are no signs of damage or wear on the connecting bars or any other parts of the circuit breaker. Verify that no dust has accumulated inside the circuit breaker. Remove dust with the recommended cleaning tools.

Points to be checked	No.	Description
(continued) Maintenance of the circuit breaker panel	4 **Visible signs of damage or wear on a drawout circuit breaker**	Verify that there are no signs of damage or wear on the connecting bars or any other parts of the circuit breaker. Perform a preventive replacement or repair as necessary. Verify that no dust has accumulated inside the circuit breaker or chassis. Remove dust with the recommended cleaning tools.
	5 **Check of the insulation of the circuit breaker**	Use an insulation tester to verify the resistance of the insulation between: • the input and output terminals • the input/output terminals and the ground potential.
Maintenance of power connections	1 **Checking the power connections on a fixed circuit breaker**	Measure the resistance of the power contacts phase by phase.
	2 **Checking the power connections on a drawout circuit breaker**	Measure the resistance of the power contacts phase by phase.
Maintenance of the chassis and the drawout part	1 **Moving from the Connected position to the Test position**	Verify the change from the Connected position to the Test position. Verify that the mechanical position indicator and the padlocking and position acknowledgement tab work correctly. Verify the opening of the circuit breaker.
	2 **Moving from the Test position to the Disconnected position**	Verify the change from the Test position to the Disconnected position. Verify that the mechanical position indicator and the padlocking and position acknowledgement tab work correctly. Verify the proper removal and insertion of the circuit breaker from and into the chassis.
	3 **Moving from the Disconnected position to the Test position**	Verify the change from the Disconnected position to the Test position. Verify that the mechanical position indicator and the padlocking and position acknowledgement tab work correctly.
	4 **Moving from the Test position to the Connected position**	Verify the change from the Test position to the Connected position. Verify that the mechanical position indicator and the padlocking and position acknowledgement tab work correctly. Verify the opening of the circuit breaker.
	5 **Check the RI open-door racking interlock accessory**	Check to ensure that it is not possible to insert the racking handle into the place to insert/withdraw when the electrical cabinet door is open.
	6 **Removing the circuit breaker**	Verify the proper removal of the circuit breaker from the chassis.

Points to be checked	No.	Description
(continued) Maintenance of the chassis and the drawout part	7 **Check for cleanliness and presence of grease**	Check that the interior of the chassis is in good condition and clean. If dust is present, clean it. Clean the position sensor for COM (PSE). Check the condition of the lubricant and ensure it is applied uniformly to essential places.
	8 **Check the insulating safety shutters**	Verify that the insulating safety shutters are in good condition and function correctly.
	9 **Check of the contact clamps**	Take out, check and re-lubricate the contacts clusters.
	10 **Check of the general condition of the moving part**	Verify that there are no signs of damage or wear on the moving part. Clean the moving part and the position sensor for COM (PSE).
	11 **Check of the jaw contacts**	Check the tightness of the screws in the jaw contacts. Verify that there are no signs of damage or wear on the jaw contacts. Verify the depth of penetration of the jaw contacts into the contacts clusters. Check the condition of the lubricant and ensure it is applied uniformly to the jaw contacts.
Maintenance of the arc chambers	1 **External check of the arc chambers**	Verify that there are no signs of damage on the exterior of the air chambers. Verify that all the screws on the air chambers are present.
	2 **Cleaning the filters and checking the arc chambers**	Clean the filters of the air chambers. Verify that the separation plates are in good condition and clean them. Replace the air chambers if the separation plates are damaged.
	3 **Checking the arc chambers**	Check and clean inside the air chambers.
Maintenance of the main contacts		Do a visual check on the condition of the fixed and mobile contacts. Check the wear on the contacts.

Points to be checked	No.	Description
Maintenance of the opening and closing mechanism	1 **Check of the mechanism**	Check the wear on the mechanism springs. Verify the condition (dust, lubricant, etc.) of the closing spring charging mechanism.
	2 **Closing and locking of the circuit breaker contacts**	Once the circuit breaker is closed, check that it does not open when the closing spring is being charged using the charging handle. Verify that the CYC cycle counter is working properly.
	3 **Checking the MO spring charging motor**	Verify that the MO spring charging motor works properly. Check the continuity between the terminals of the motor. Verify the closing spring charging time at 85 % of Vn min.
Maintenance of the coils and auxiliary contacts	1 **Closing of the circuit breaker using a CC closing coil**	Using an external adjustable power supply and a push button, verify that the CC closing coil works correctly at 85 % of Vn. Verify that the CC closing coil works properly with the original control circuit.
	2 **Opening the circuit breaker using an SH shunt trip coil**	Using an external adjustable power supply and a push button, verify that the SH shunt trip coil works correctly at 85 % of Vn. Verify that the SH shunt trip coil works properly with the original control circuit.
	3 **Opening the circuit breaker using a UV undervoltage release coil**	Verify that the UV undervoltage release coil works properly with the original control circuit. Using an external adjustable power supply and a push button, verify that the UV undervoltage release coil works correctly at different % of Vn.
	4 **Opening of the circuit breaker using a UVTC time controller for undervoltage release coil**	Using an external variable power supply and a chronometer, verify that the circuit breaker opens at the end of the time period set on the time controller at 35 % and 85 % of Vn.
	5 **Check of the AX auxiliary contacts**	Use an ohmmeter to verify the continuity between the AX auxiliary contacts.
	6 **Check of the TB connection terminal blocks**	Verify that there are no signs of damage or wear on the cabling or terminal blocks.
Maintenance of the mechanical locking and interlocking systems	1 **Checking the circuit breaker's interlock in OFF using an OLK keylock**	Verify the interlocking of the circuit breaker using a lock.

Points to be checked	No.	Description
(continued) Maintenance of the mechanical locking and interlocking systems	❷ **Checking the circuit breaker locking in the OFF position using OLP padlocks**	Verify the interlocking of the circuit breaker using a padlock.
	❸ **Check of the interlocking of the circuit breaker position in its chassis using locks**	Check the interlocking of the circuit breaker in the chassis using locks.
	❹ **Checking the locking of the circuit breaker position in its chassis using padlocks**	Verify the locking of the circuit breaker in the chassis using padlocks.
	❺ **Checking the MI mechanical interlocking**	Carry out at least one switching cycle of the interlocking mechanism to verify that it works correctly in all situations. Clean the interlocking plates and verify their condition visually. Inspect the interlocking cables. Check the functional space between the upper lever and the lever stop. Check for the presence of lubricant on the cam of the interlocking plates.
Electronic Trip Maintenance	❶ **Visual check of the electronic trip unit**	Verify that the following are in good condition: the display, the dials, the OK button on a sentinel trip unit, and the entire keyboard on a sentinel Energy trip unit. Verify that the trip unit is operational and ready to perform its protection function. Verify that no error indicators or alarm messages are visible.
	❷ **Local tripping and reset of the trip unit**	Initiate a tripping test using the Hager Power setup software. Acknowledge the trip message on the trip unit. Verify that the tripping test is recorded in the event log in the application. Verify the switching of the FS trip fault contact.
	❸ **Remote triggering and reset of the electronic trip unit**	Verify that remote acknowledgement works using the RR/DI input.
	❹ **Test of the OAC outputs alarms contacts module**	Test the closing of the OAC alarms outputs contacts module using the Hager Power setup software.

Points to be checked	No.	Description
(continued) Electronic Trip Maintenance	❺ **Test of the Zone Selective Interlocking function (ZSI)**	Test the ZSI function using the Hager Power setup software.
	❻ **Test of the trip curve**	Use the Hager Power setup software to: • Verify that the protection setting values displayed correspond to those defined in the commissioning documentation • Initiate a full test of the trip curve.
	❼ **Check of the event log**	Use the Hager Power setup software to: • Verify the meters (On/Off, trips, alarms) as well as the trip events and faults. • ・Save the log.
	❽ **Reset of the maintenance parameters**	Reset the maintenance alarm and adjust it to the next maintenance date (to be carried out by persons authorised by Hager).

5.3 Recommendations after prolonged storage

Storage advice

HW2 and HW4 circuit breakers must be stored in a place that is dry, well-aired and protected from rain. They must be protected against dust, water, paint, chemical products and rubble.

The acceptable storage temperature range is -40 °C to 70 °C.

HW2 and HW4 circuit breakers must be stored in the open position (OFF) with the spring discharged.

If a prolonged period of storage is anticipated, ensure that the hygrometry rate in the premises is maintained at a value below 70%.

Maintenance after extended storage or on a spare product during each maintenance on an active breaker.

After storage for more than 6 months, and before any installation of the HW2 or HW4 circuit breakers, the following operations must be performed.
If the HW2 and HW4 circuit breakers have been stored in severe conditions (high temperature, corrosive atmosphere) add the operations appearing *in italics.*

After storage for more than 2 years, it is recommended that the checks be performed by the persons responsible for maintenance who have undergone Hager training.

This chapter gives a non-exhaustive overview of the operations to be carried out after an extended storage period.

Points to be checked	No.	Description
Chassis and the drawout part	❶ **Moving from the Connected position to the Test position**	Verify the change from the Connected position to the Test position. Verify that the mechanical position indicator and the padlocking and position acknowledgement tab work correctly. Verify the opening of the circuit breaker.
	❷ **Moving from the Test position to the Disconnected position**	Verify the change from the Test position to the Disconnected position. Verify that the mechanical position indicator and the padlocking and position acknowledgement tab work correctly. Verify the proper removal and insertion of the circuit breaker from and into the chassis.
	❸ **Moving from the Disconnected position to the Test position**	Verify the change from the Disconnected position to the Test position. Verify that the mechanical position indicator and the padlocking and position acknowledgement tab work correctly.
	❹ **Moving from the Test position to the Connected position**	Verify the change from the Test position to the Connected position. Verify that the mechanical position indicator and the padlocking and position acknowledgement tab work correctly. Verify the opening of the circuit breaker.

Points to be checked	No.	Description
(continued) chassis and the drawout part	5 **Removing the circuit breaker**	Verify the proper removal of the circuit breaker from the chassis.
	6 **Check for cleanliness and presence of grease**	Check that the interior of the chassis is in good condition and clean. If there is dust and excessive soiling, contact the persons responsible for maintenance who have undergone Hager training. Clean the position sensor for COM (PSE) ().
	7 *Check the insulating safety shutters*	*Verify that the insulating safety shutters are in good condition and function correctly.*
	8 *Check of the contact clamps*	*Check the condition of the contacts clusters.* *If there is any anomaly, contact the persons responsible for maintenance who have undergone Hager training.*
	9 *Check of the general condition of the moving part*	*Verify that there are no signs of wear on the moving part.* *If necessary, clean the moving part and the position sensor for COM (PSE) (see Chapter 4.3, Check of the chassis and its moving part).*
	10 *Check of the jaw contacts*	*Verify that there are no signs of wear on the jaw contacts.* *Check the condition of the lubricant on the jaw contacts.*
Opening and closing mechanism	1 **Closing and locking of the circuit breaker contacts**	Once the circuit breaker is closed, check that it does not open when the closing spring is being charged using the charging handle. Verify that the CYC cycle counter is working properly.
	2 **Checking the MO spring charging motor**	Verify that the MO spring charging motor works properly.
Coils	1 **Closing of the circuit breaker using a CC closing coil**	Using an external adjustable power supply and a push button, verify that the CC closing coil works correctly at 85 % of Vn min.
	2 **Opening the circuit breaker using an SH shunt trip coil**	Using an external adjustable power supply and a push button, verify that the SH shunt trip coil works correctly at 85 % of Vn.
	3 **Opening the circuit breaker using a UV undervoltage release coil**	Using an external adjustable power supply and a push button, verify that the UV undervoltage release coil works correctly at different % of Vn.
Mechanical locking and interlocking systems	1 **Checking the circuit breaker's interlock in OFF using an OLK keylock**	Verify the interlocking of the circuit breaker using a lock.

Points to be checked	No.	Description
(continued) Mechanical locking and interlocking systems	❷ **Checking the circuit breaker locking in the OFF position using OLP padlocks**	Verify the interlocking of the circuit breaker using a padlock.
	❸ **Check of the interlocking of the circuit breaker position in its chassis using locks**	Check the interlocking of the circuit breaker in the chassis using locks.
	❹ **Checking the locking of the circuit breaker position in its chassis using padlocks**	Verify the locking of the circuit breaker in the chassis using padlocks.
Electronic trip unit	❶ **Visual check of the electronic trip unit**	Verify that the following are in good condition: the display, the dials, the OK button on a sentinel trip unit, and the entire keyboard on a sentinel Energy trip unit. Verify that the trip unit is operational and ready to perform its protection function. Verify that no error indicators or alarm messages are visible.
	❷ **Local tripping and reset of the trip unit**	Initiate a tripping test using the Hager Power setup software. Acknowledge the trip message on the trip unit. Verify that the tripping test is recorded in the event log in the application. Verify the switching of the FS trip fault contact.
	❸ **Remote triggering and reset of the electronic trip unit**	Verify that remote acknowledgement works using the RR/DI input.
	❹ **Test of the OAC outputs alarms contacts module**	Test the closing of the OAC alarms outputs contacts module using the Hager Power setup software.
	❺ **Test of the trip curve**	Use the Hager Power setup software to initiate a full test of the trip curve.
	❻ **Reinstallation of the backup battery**	Reset the electronic trip unit and re-install the original battery. Follow the instructions in chapter 6.8 "Backup battery for electronic trip unit", while reusing the original battery.

6 Installation or replacement of an accessory

6.1 Removal of the drawout circuit breaker

Danger

Risk of circuit breaker falling.
Risk of crushing injury.

Ensure the device is only handled by qualified personnel equipped with lifting equipment and suitable safety equipment.

Warning

Risk of serious injury.

Before any intervention inside a circuit breaker, ensure that the closing spring is completely discharged.

Notice

Risk of mechanical damage.

To avoid the product tipping, ensure that the chassis is correctly installed before starting to extract the circuit breaker.

Before any installation or replacement of an accessory takes place, perform the following procedure to remove a drawout circuit breaker.

	Action	Illustration
1	The circuit breaker is closed, and the spring is discharged or charged. Make sure all accessories on the circuit breaker are de-energised.	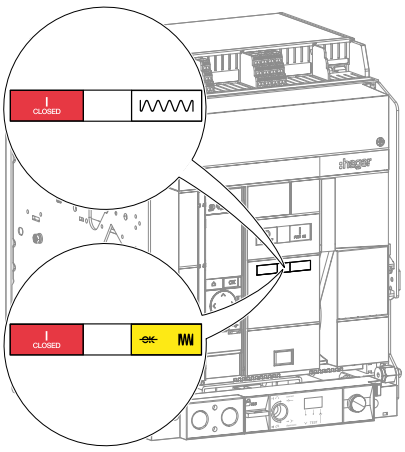

	Action	Illustration
2	Open the circuit breaker by pressing the opening push button .	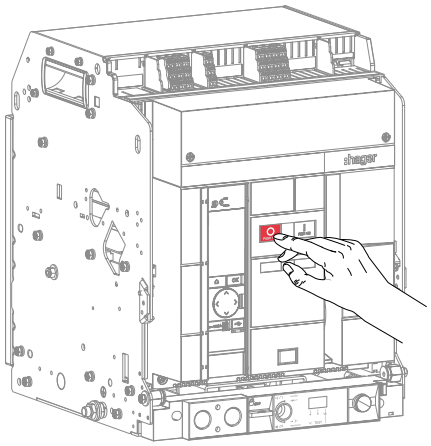
3	The indicators change status.	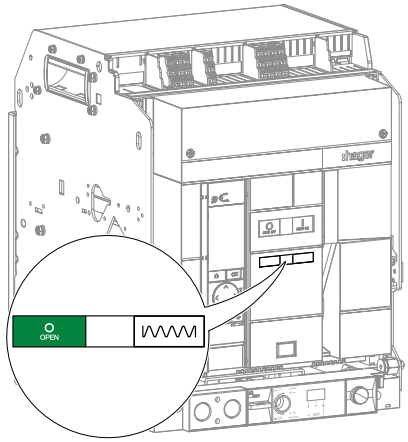
4	Turn the circuit breaker to the disconnected position (see Installation manual HW2 / HW4 6LE009367A).	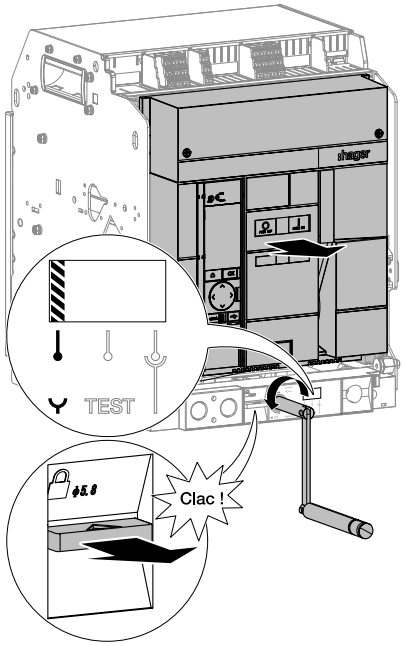

	Action	Illustration
5	By holding down the toggles...	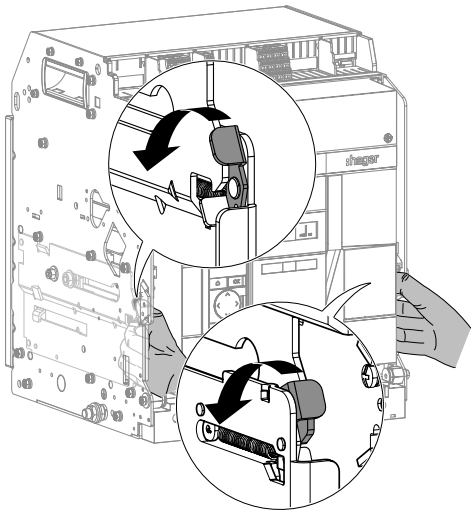
	pull on the handles to remove the circuit breaker from its housing.	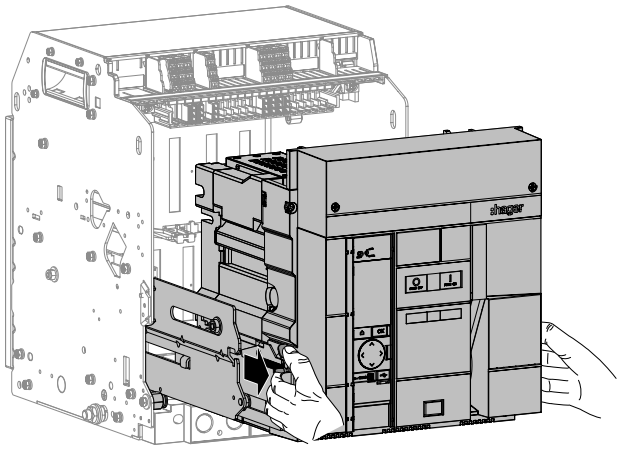
6	The circuit-breaker can be removed from the guide rails (see Installation manual for HW2 / HW4 6LE009367A).	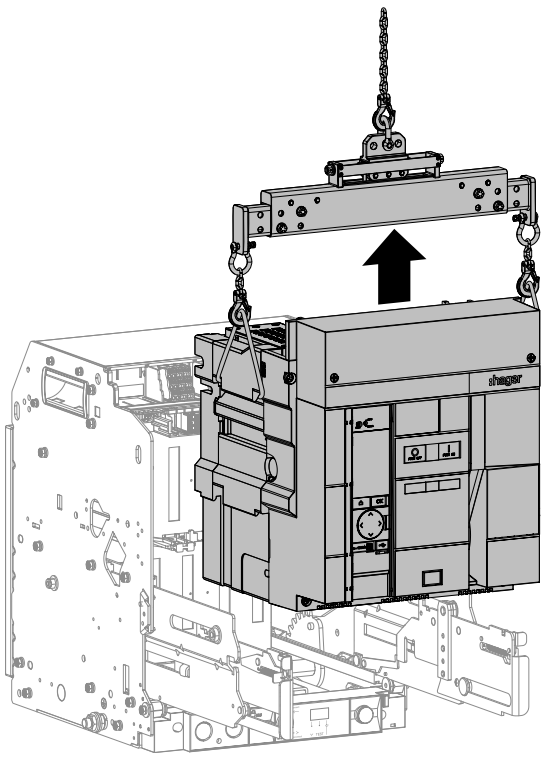

	Action	Illustration
7	If necessary, unseal the transparent cover protecting access to the trip unit, then unscrew the 4 screws and lower the arming handle.	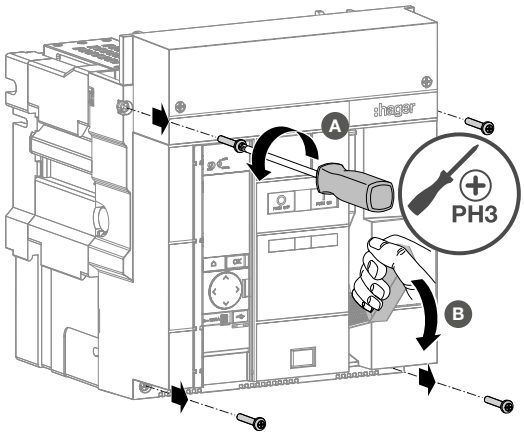
8	Remove the front cover.	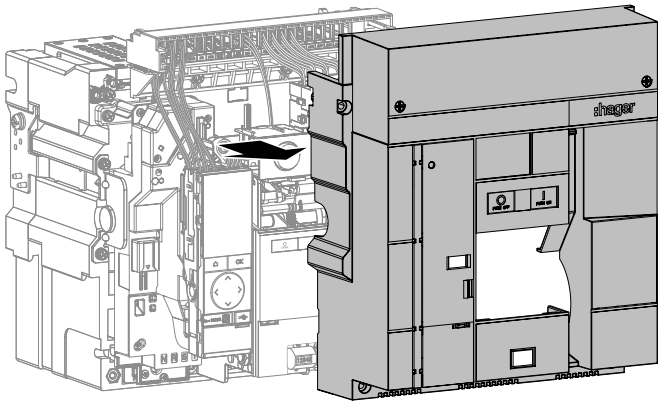

6.2 Connecting an accessory to a drawout circuit breaker

To disconnect and connect the connector of an accessory to be replaced on a drawout circuit breaker, follow the following procedure:

	Action	Illustration
1	Apply pressure to the small tab, then remove the connector from the accessory that you want to replace.	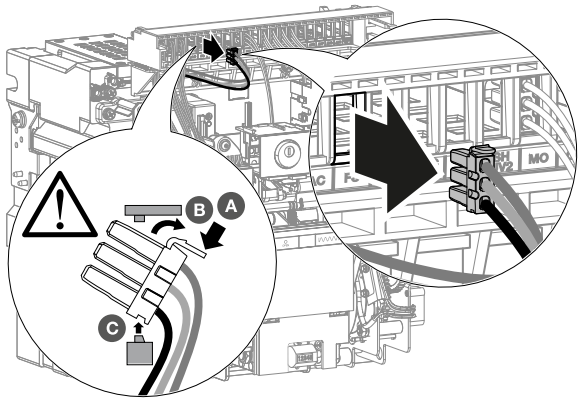
2	Once the defective accessory has been replaced, clip the connector of the new accessory in the same place on the terminal block support.	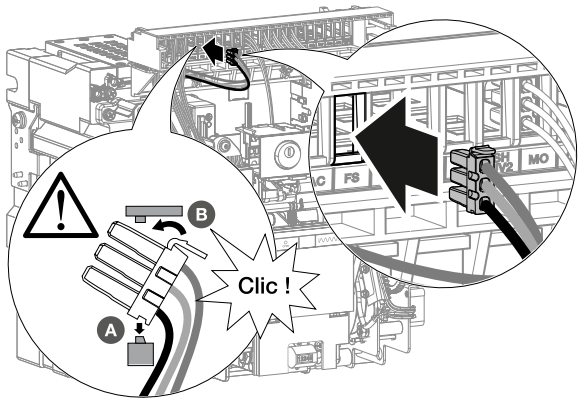

6.3 Put back in place the drawout circuit breaker

Danger

Risk of circuit breaker falling.
Risk of crushing injury.

Ensure the device is only handled by qualified personnel equipped with lifting equipment and suitable safety equipment.

Notice

Risk of mechanical damage.

To avoid the product tipping, ensure that the chassis is correctly secured before starting to insert the circuit breaker.

Once the installation or replacement of an accessory has been completed, follow the procedure below to reassemble a drawout circuit breaker.

	Action	Illustration
1	Lower the charging handle.	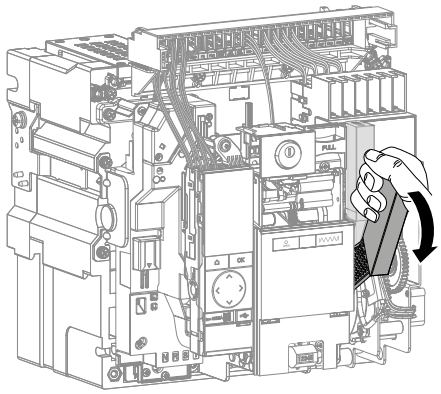
2	Put the front cover back on.	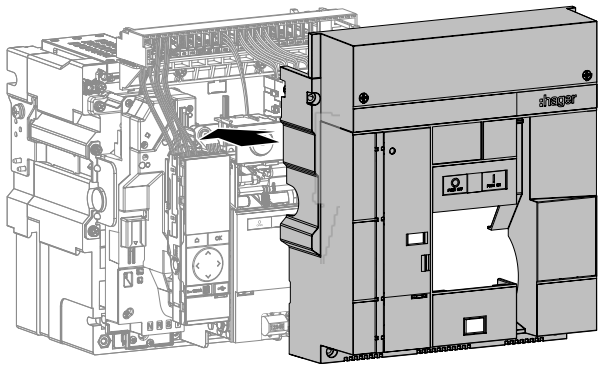

	Action	Illustration
3	Tighten the 4 screws.	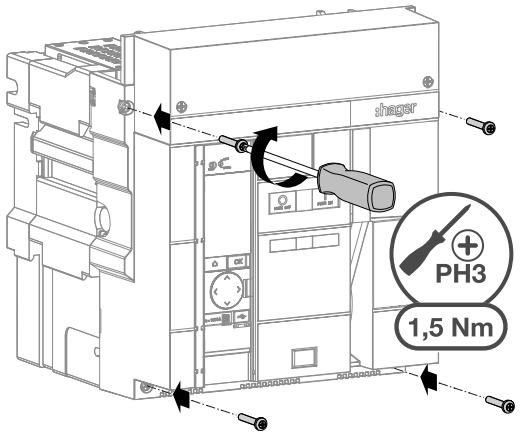
4	Open the transparent cover protecting access to the trip unit.	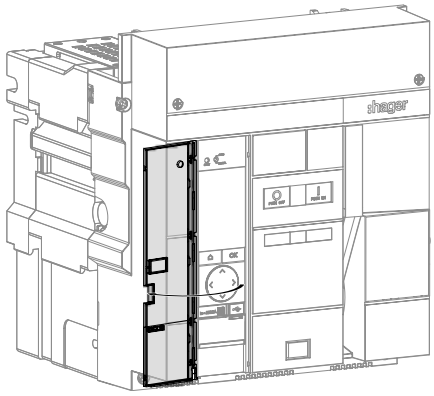
5	Remove the USB-C port cover.	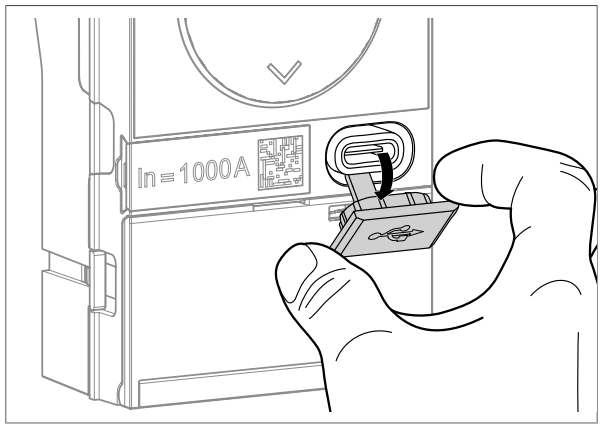
6	Then connect an external battery to the USB-C port.	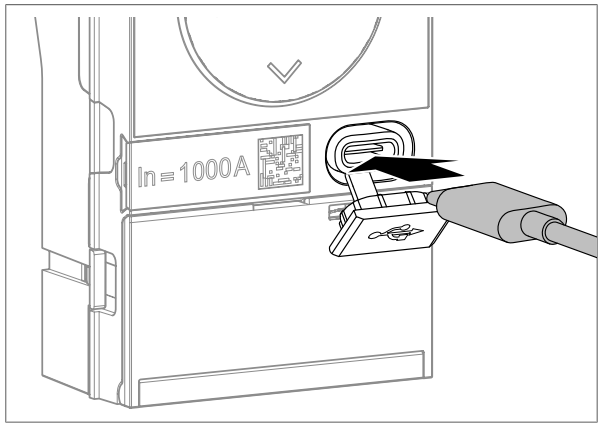

	Action	Illustration
7	Verify that: • On a sentinel trip unit, the screen lights up and the Ready-ToProtect indicator flashes, indicating that the trip unit is operational. • On a sentinel Energy trip unit, the screen briefly displays the message :hager and the ReadyToProtect indicator lights up.	 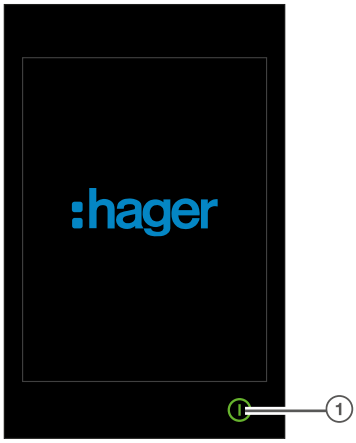 1 ReadyToProtect indicator

WHAT TO DO

If an error indicator appears, refer to Troubleshooting Guide 6LE009769A.

	Action	Illustration
8	Remove the external battery.	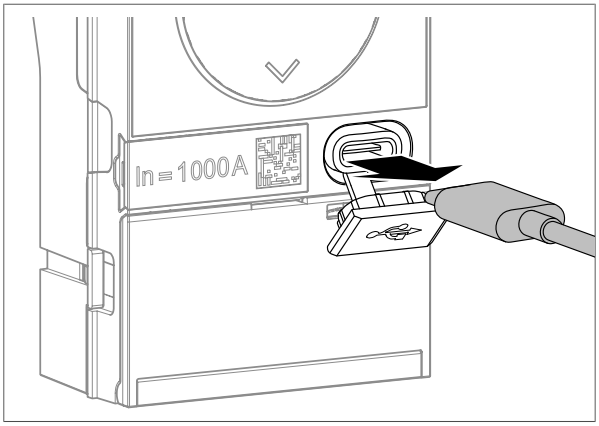

	Action	Illustration
9	Close the USB-C port cover.	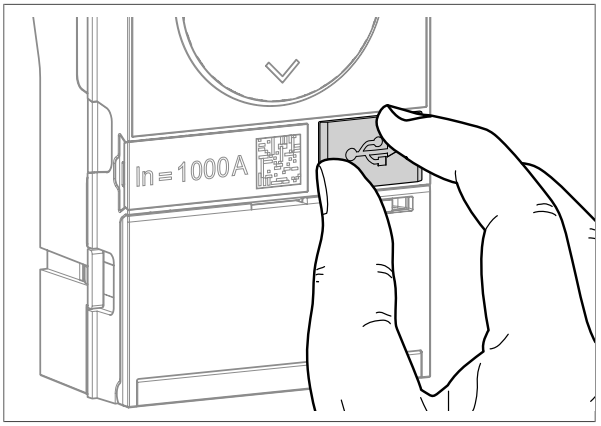
10	Close the transparent cover.	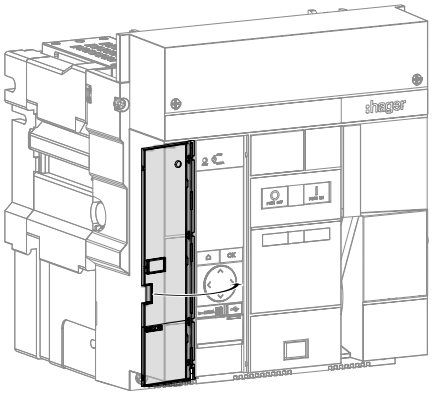
11	Ensure that the chassis is in the Disconnected position.	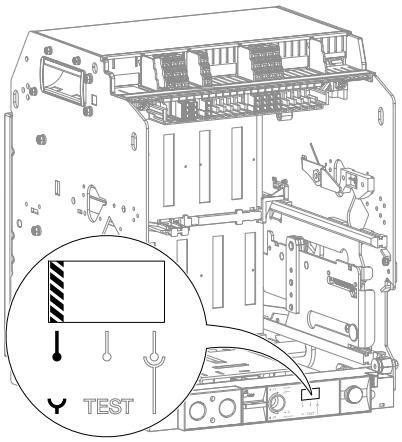

	Action	Illustration
12	While pressing the toggles, pull the handles to take out the guide rails.	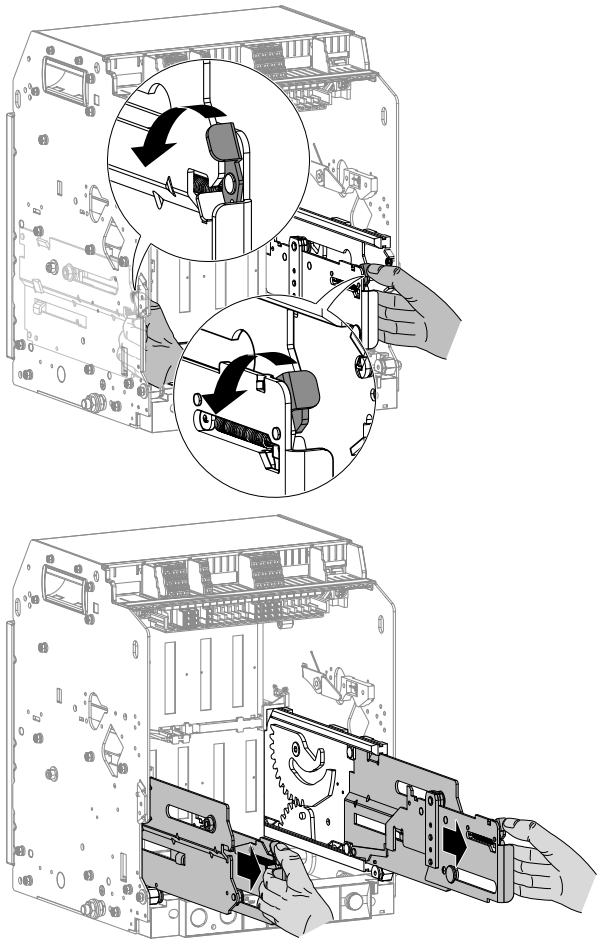
13	Using an appropriate lifting device, position the circuit breaker on the guide rails, having previously aligned the guides with the slots on the circuit breaker.	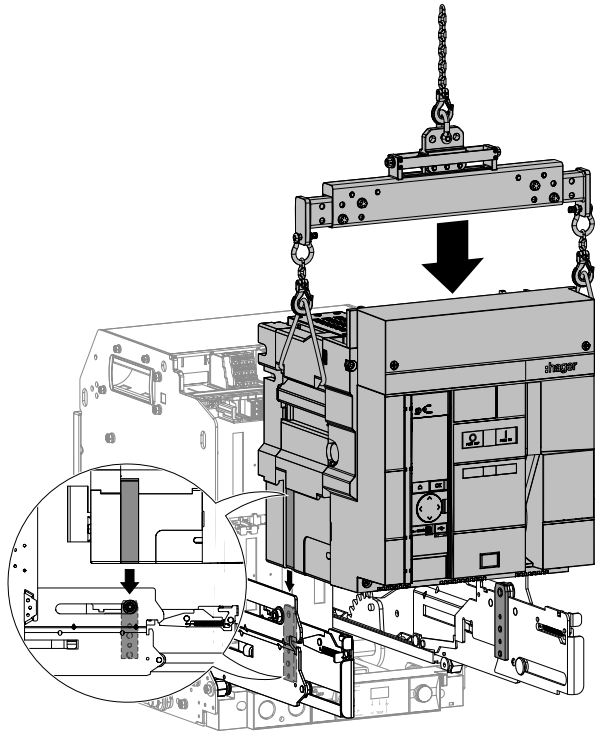

	Action	Illustration
14	Remove the lifting equipment.	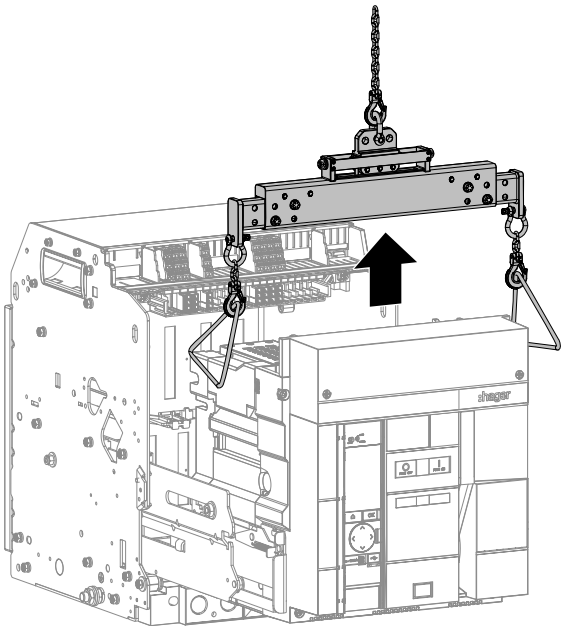
15	Push the circuit breaker to the back of the chassis without pushing on the guide rails.	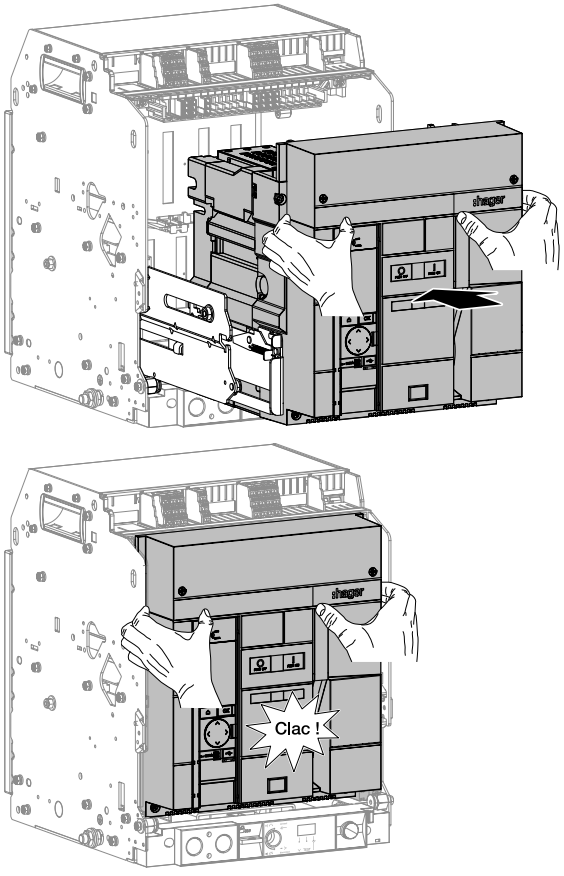

	Action	Illustration
16	Verify that the guide rails are correctly positioned.	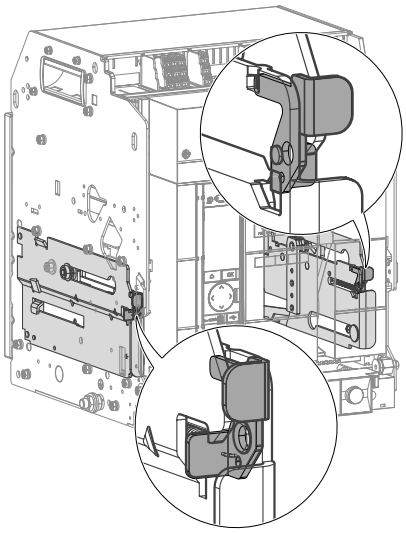
17	Put the circuit breaker in the Connected position.	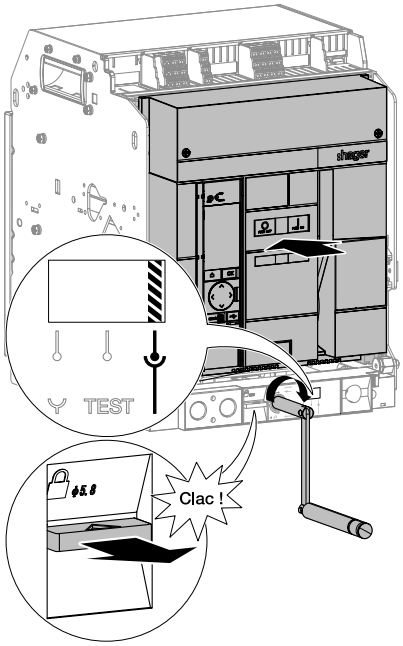
18	Apply a seal to the cover if necessary.	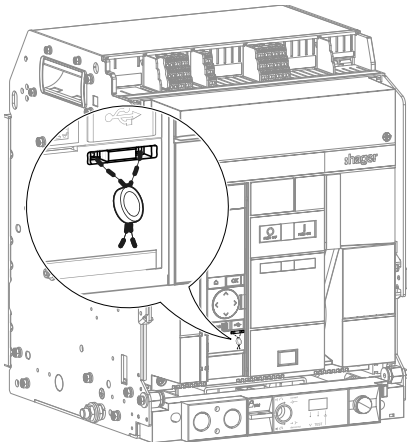

Warning

Risk of unexpected operation.

Before closing the transparent cover, recheck the protection settings (see Sentinel electronic trip unit 6LE009420A or Sentinel Energy electronic trip unit User Guide 6LE009417A).

	Action	Illustration
19	Charge the closing spring using the charging handle until the following indicators appear.	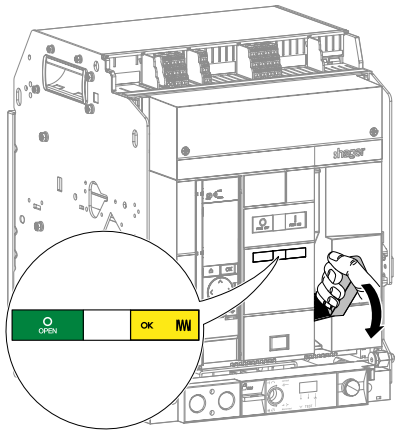
20	Close the circuit breaker by pressing the closing push button I	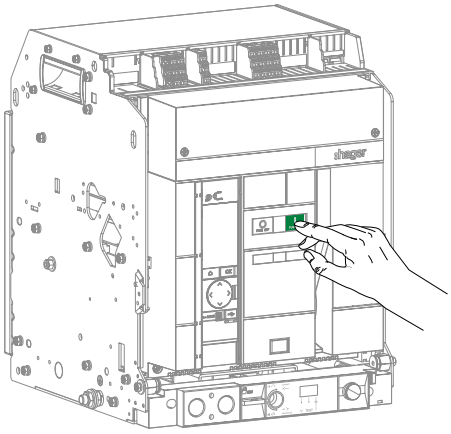
21	The indicators change status.	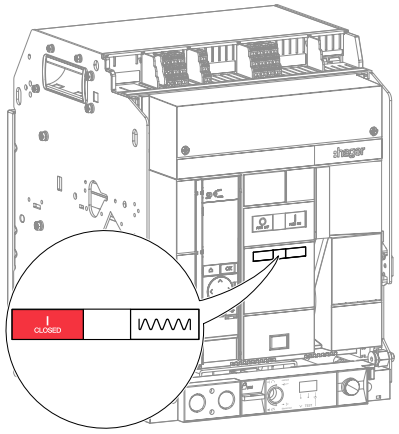

6.4 Disassembling the fixed circuit breaker

Warning

Risk of serious injury.

Before any intervention inside a circuit breaker, ensure that the closing spring is completely discharged.

Before any installation or replacement of an accessory takes place, perform the following procedure to remove a fixed circuit breaker.

	Action	Illustration
1	The circuit breaker is closed, and the spring is discharged or charged. Make sure all accessories on the circuit breaker are de-energised.	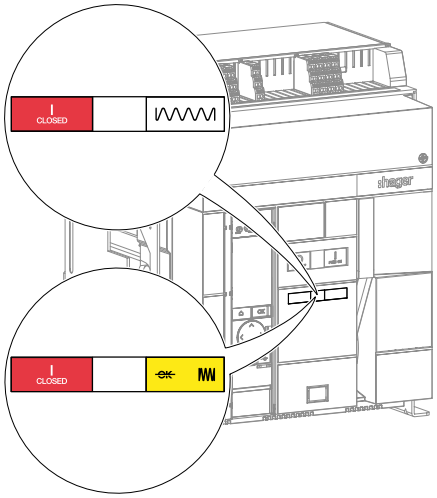
2	Open the circuit breaker by pressing the opening push button .	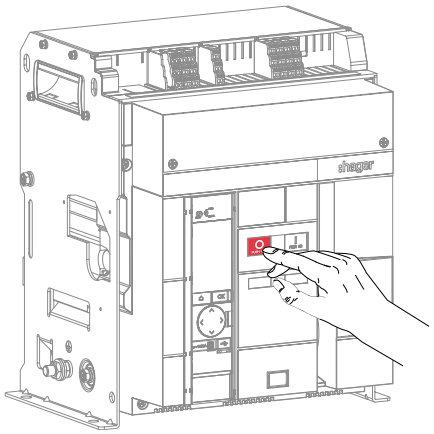

	Action	Illustration
3	The indicators change status.	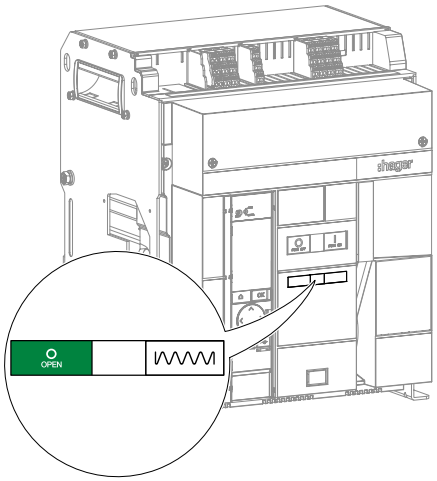
4	If necessary, unseal the transparent cover protecting access to the trip unit, then unscrew the 4 screws and lower the arming handle.	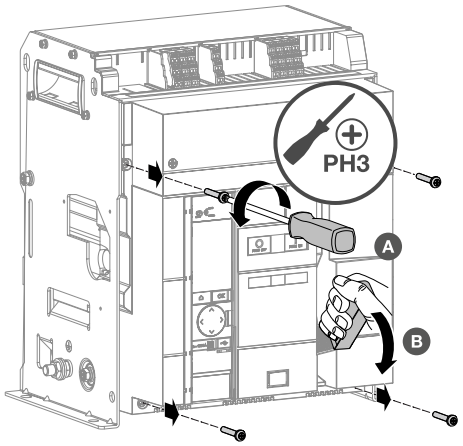
5	Remove the front cover so as to access the accessories mounted inside the circuit breaker.	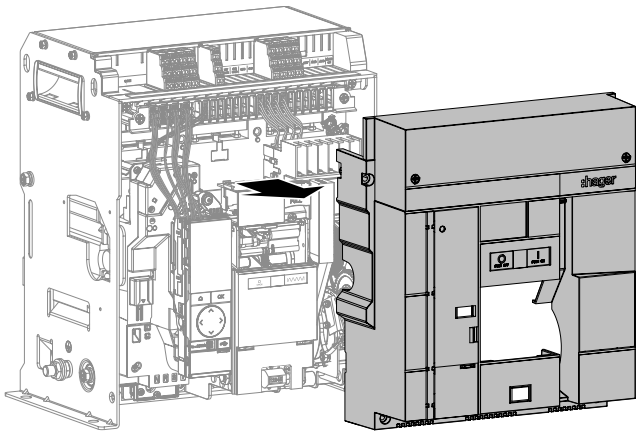

6.5 Connecting an accessory to a fixed circuit breaker

To disconnect and plug in the connector of an accessory that is to be replaced on a fixed circuit breaker, follow the following procedure:

	Action	Illustration
1	Apply pressure to the small tab, then remove the connector from the accessory that you want to replace.	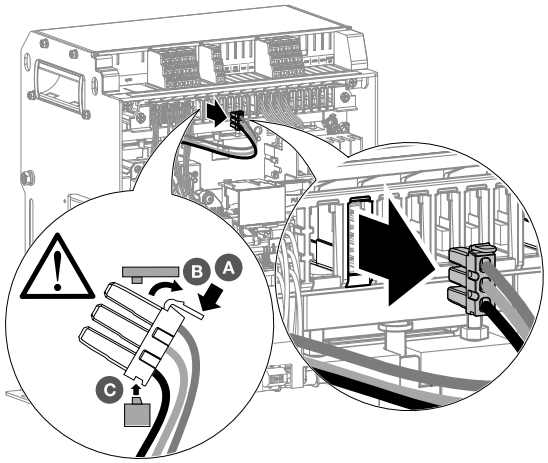
2	Once the defective accessory has been replaced, clip the connector of the new accessory in the same place on the terminal block support.	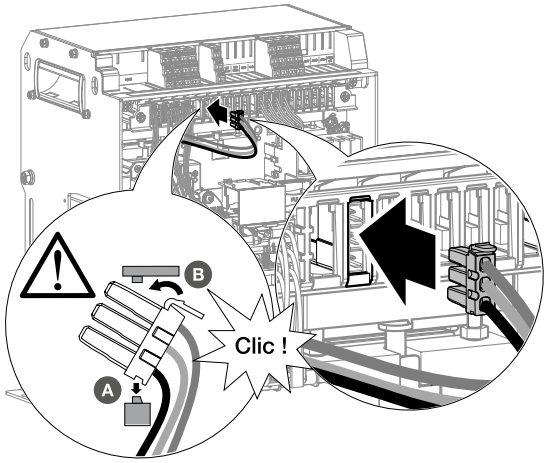

6.6 Reassembling the fixed circuit breaker

Once the installation or replacement of an accessory has been completed, follow the following procedure to reassemble a fixed circuit breaker.

	Action	Illustration
1	Lower the charging handle.	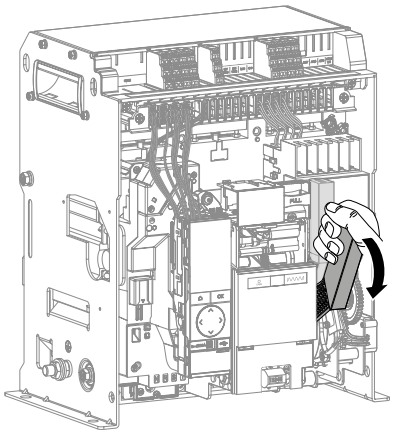
2	Put the front cover back on.	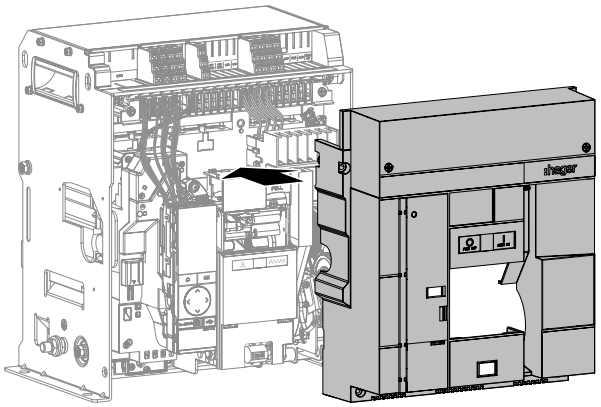
3	Tighten the 4 screws.	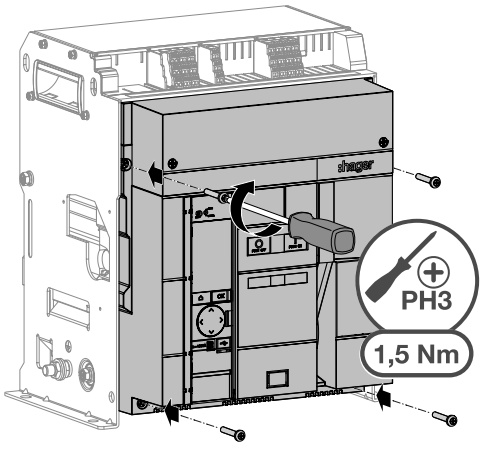

	Action	Illustration
4	Open the transparent cover protecting access to the trip unit.	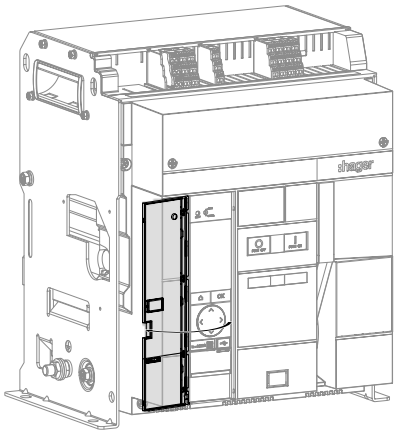
5	Remove the USB-C port cover.	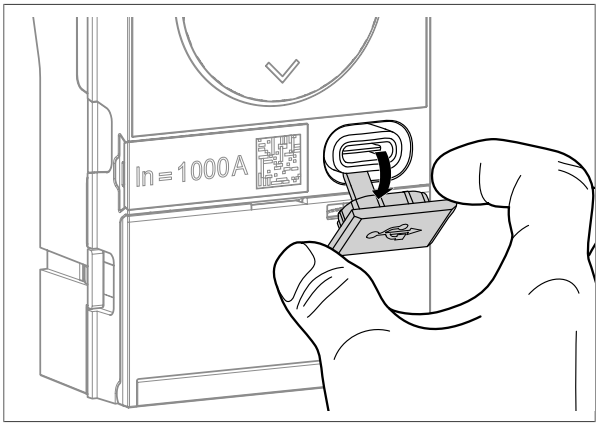
6	Then connect an external battery to the USB-C port.	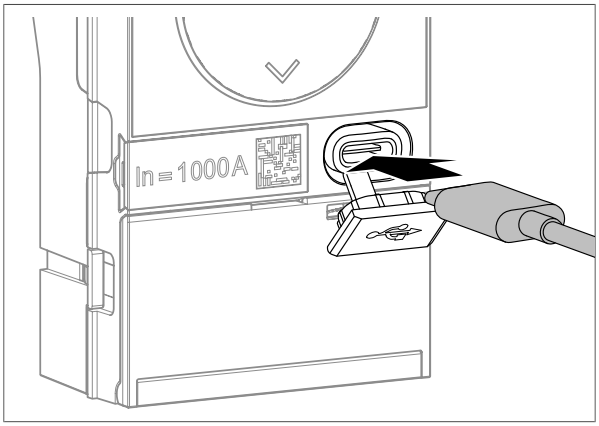

	Action	Illustration
7	Verify that: • On a sentinel trip unit, the screen lights up and the Ready-ToProtect indicator flashes, indicating that the trip unit is operational. • On a sentinel Energy trip unit, the screen briefly displays the message :hager and the ReadyToProtect indicator lights up.	 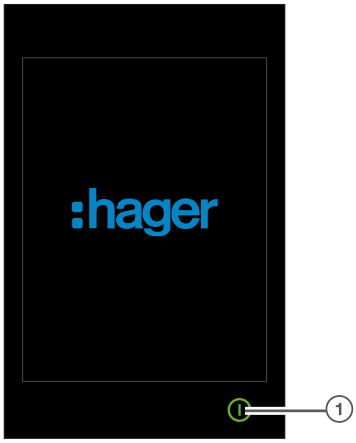 ① ReadyToProtect indicator

WHAT TO DO

If an error indicator appears, refer to Troubleshooting Guide 6LE009769A.

	Action	Illustration
8	Remove the external battery.	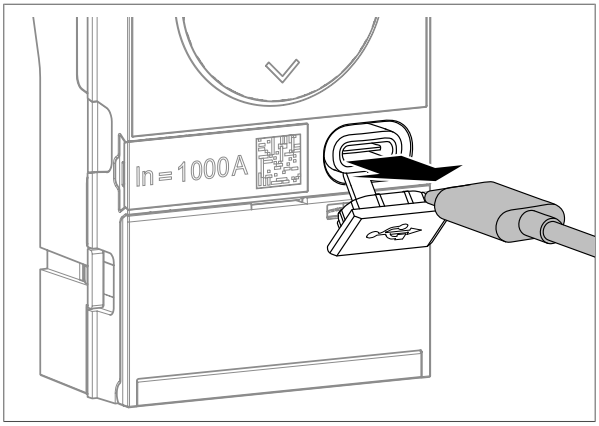

	Action	Illustration
9	Close the USB-C port cover.	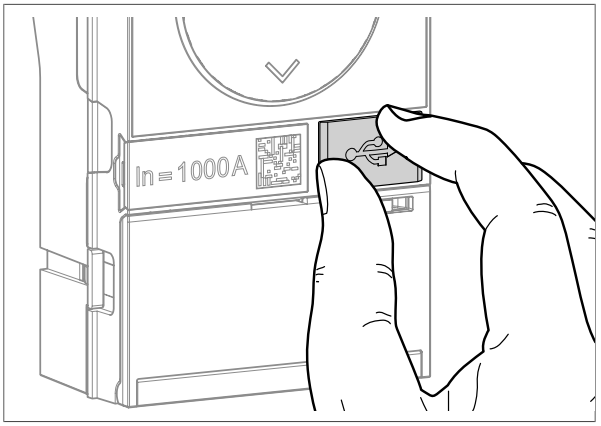
10	Close the transparent cover.	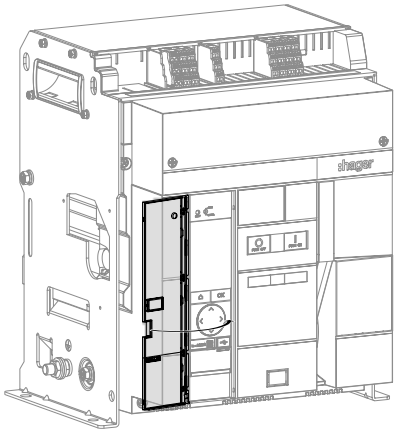
11	Apply a seal to the cover if necessary.	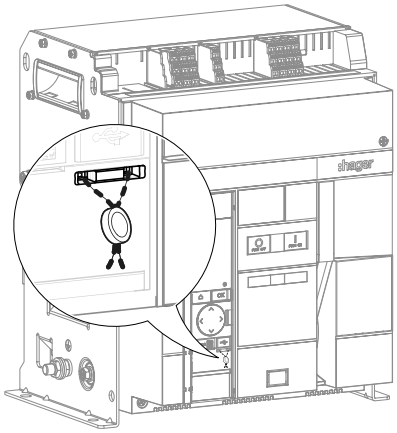

Warning

Risk of unexpected operation.

Before closing the transparent cover, recheck the protection settings (see Sentinel electronic trip unit 6LE009420A or Sentinel Energy electronic trip unit User Guide 6LE009417A).

	Action	Illustration
12	Charge the closing spring using the charging handle until the following indicators appear.	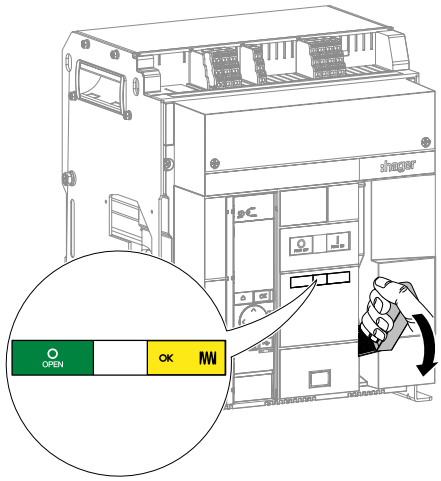
13	Close the circuit breaker by pressing the closing push button 	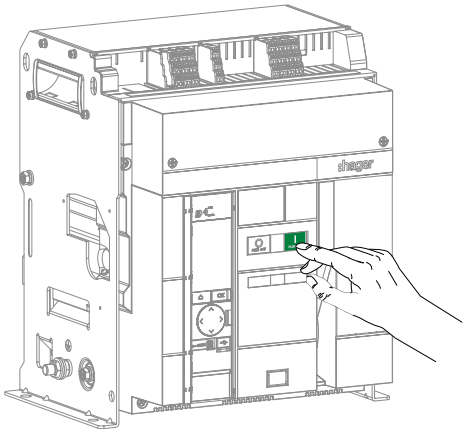
14	The indicators change status.	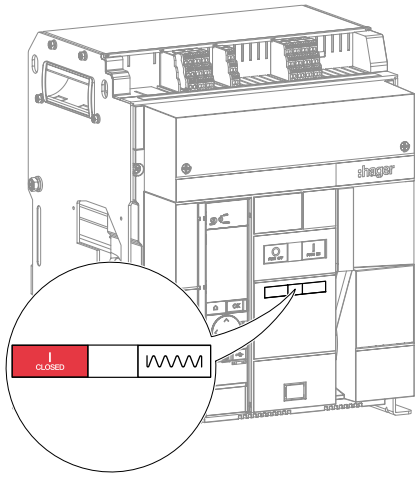

6.7 Rating plug of the electronic trip unit

The rated current value In can be modified by changing the rating plug located on the front of the trip unit. The Meter Plus, Harmonic, Advanced and Ultimate reference model rating plugs are only compatible with sentinel Energy trip units.

Rated current In	Reference of the standard rating plug	Reference of the Meter Plus rating plug	Reference of the Harmonic rating plug	Reference of the Advanced rating plug	Reference of the Ultimate rating plug
630 A	HWW465HSA	HWW665HSA	HWW485HSA	HWW705HSA	HWW725HSA
800 A	HWW466HSA	HWW666HSA	HWW486HSA	HWW706HSA	HWW726HSA
1000 A	HWW467HSA	HWW667HSA	HWW487HSA	HWW707HSA	HWW727HSA
1250 A	HWW468HSA	HWW668HSA	HWW488HSA	HWW708HSA	HWW728HSA
1600 A	HWW469HSA	HWW669HSA	HWW489HSA	HWW709HSA	HWW729HSA
2000 A	HWW470HSA	HWW670HSA	HWW490HSA	HWW710HSA	HWW730HSA
2500 A	HWW471HSA	HWW671HSA	HWW491HSA	HWW711HSA	HWW731HSA
3200 A	HWW472HSA	HWW672HSA	HWW492HSA	HWW712HSA	HWW732HSA
4000 A	HWW473HSA	HWW673HSA	HWW493HSA	HWW713HSA	HWW733HSA

Information

The value In of the rating plug cannot exceed the maximum rated current on the front of the circuit breaker.

The minimum value In of the rating plug depends on the size of the rating plug chosen.

It is 630 A for HW2 and values in the table below for HW4:

Original In	Min. possible In.
4000 A / 3200 A	2500 A
2500 A / 2000 A / 1600 A / 1250 A / 1000 A	1000 A

Danger

Danger to life, risk of injury due to electric shock, or risk of serious injury.

Before any intervention, ensure that the circuit breaker has been isolated from upstream and downstream power and control sources.

For a fixed circuit breaker, remove it first (see Chapter 6.4, Disassembling the fixed circuit breaker) then follow the operations starting from instruction 7.

For a drawout circuit breaker, follow the instructions below:

	Action	Illustration
1	If the circuit breaker is closed, and the spring is discharged or charged. Open the circuit breaker by pressing the opening push button .	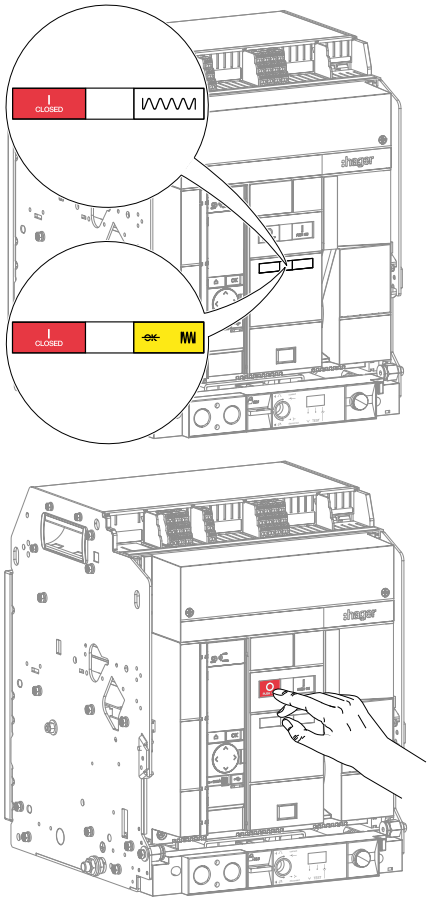
2	Verify that the indicators signal that the circuit breaker is open and: • If the circuit breaker is not equipped **with an MO spring charging motor,** that **the closing spring is discharged**. • If the circuit breaker is equipped **with an MO spring charging motor,** that **the closing spring is charged.**	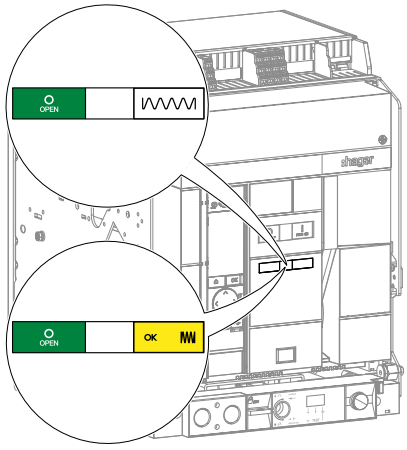

	Action	Illustration
3	For drawout circuit breakers, place the breaker in the disconnected position.	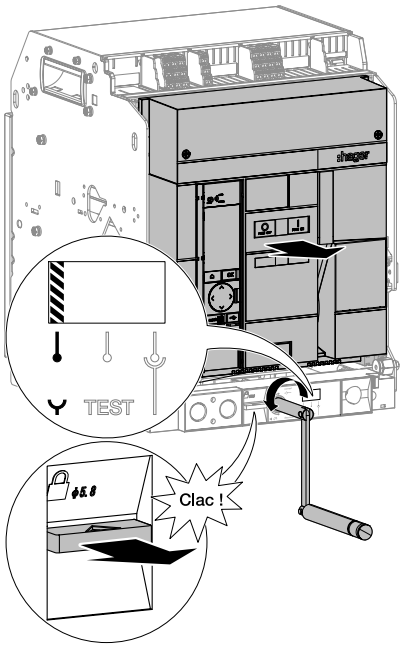
4	If necessary, remove the seal from the transparent cover, which protects access to the trip unit, then unscrew the 4 screws.	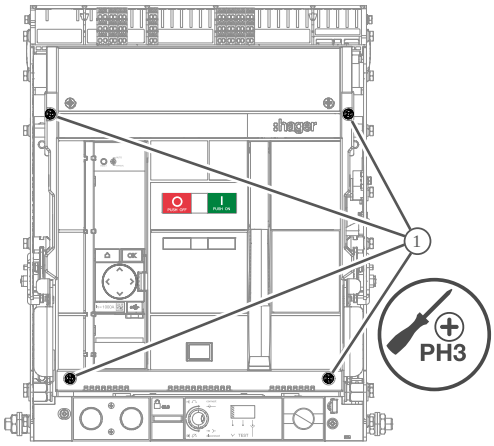
5	Lower the charging handle.	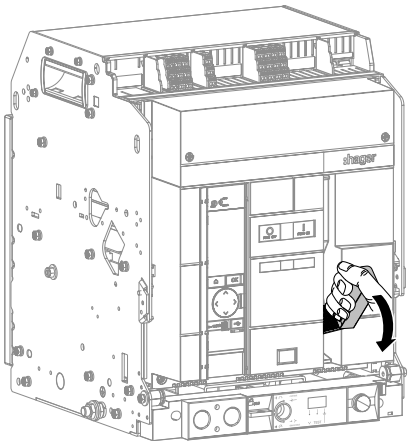

	Action	Illustration
6	Remove the front cover in order to access the trip unit.	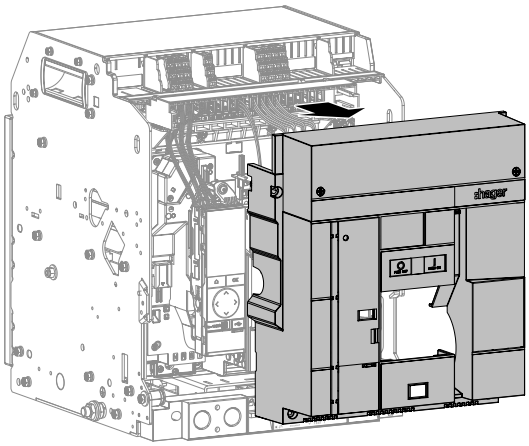
7	Insert a flat screwdriver into the tab then apply leverage to unlock it.	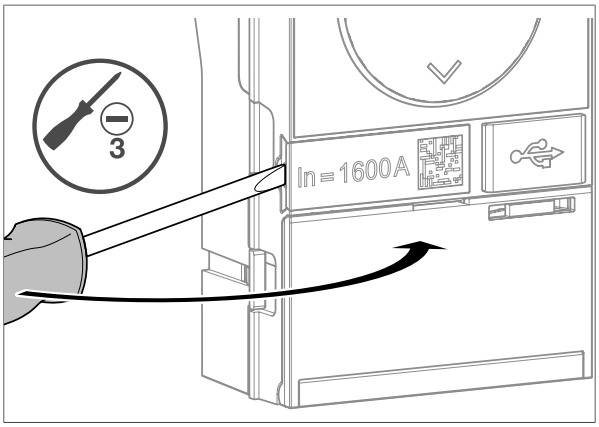 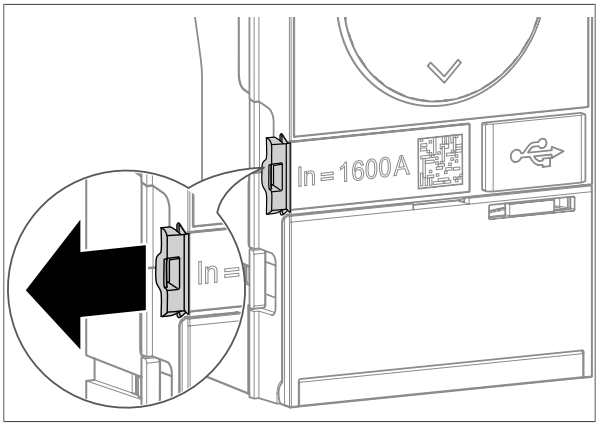
8	Remove the rating plug.	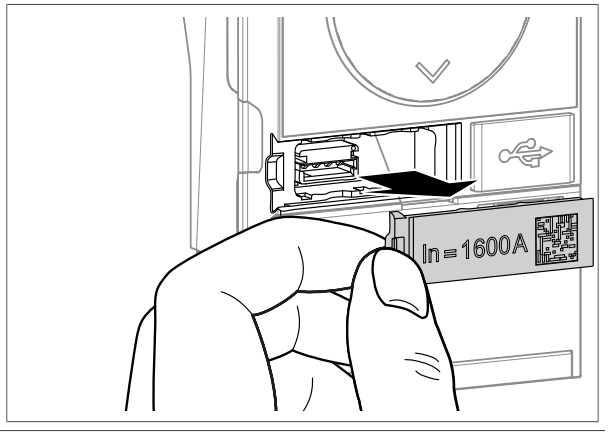

	Action	Illustration
9	Position the tab of the new rating plug to the left.	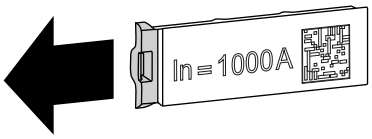
10	Insert the rating plug into its housing.	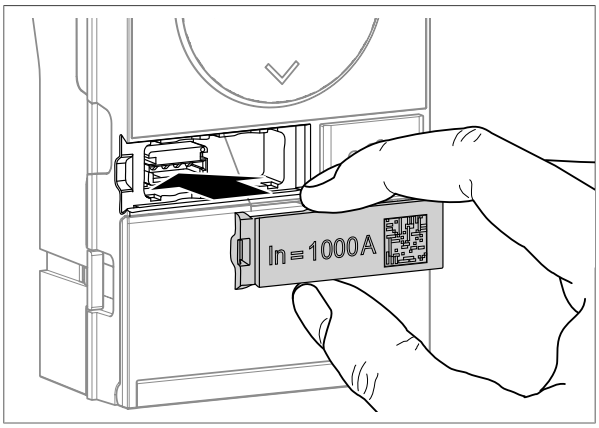
11	Push the calibrator onto the trip unit and then push the tab to the right to lock it.	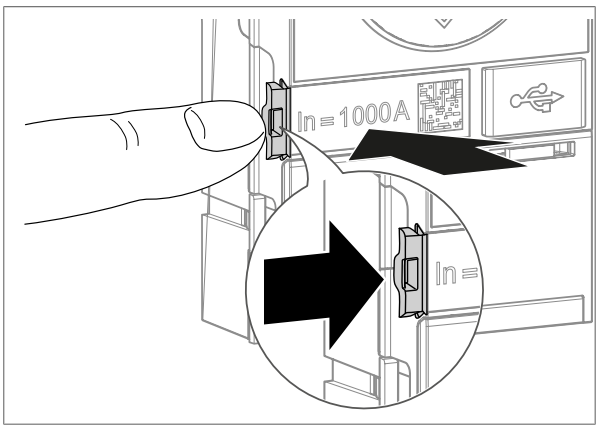
12	Remove the USB-C port cover.	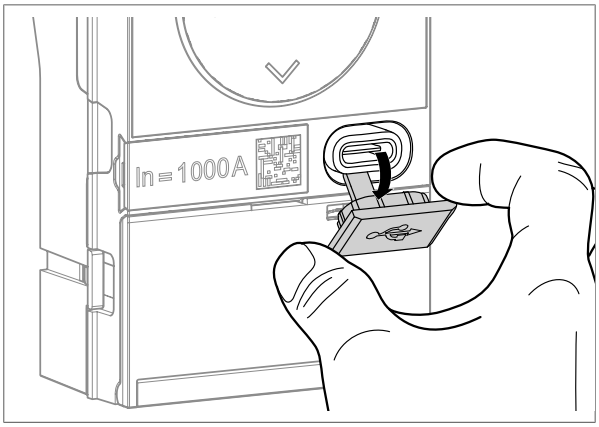

	Action	Illustration
13	Connect the external battery to the USB-C port.	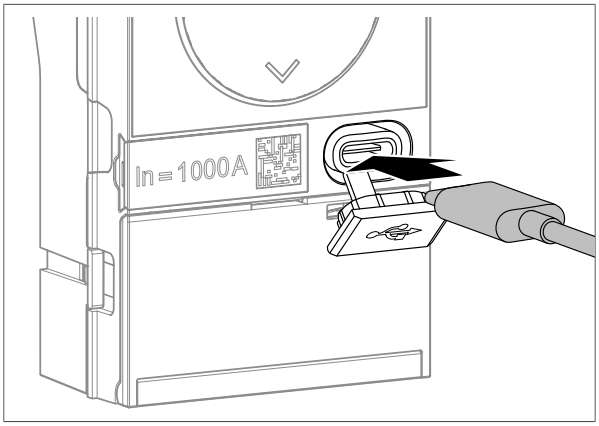
14	Verify that: • On a sentinel trip unit, the screen lights up and the ReadyToProtect indicator appears, indicating that the calibrator has been taken into account. • On a sentinel Energy trip unit, the screen briefly displays the message :hager and the ReadyToProtect indicator lights up.	 Fig. 9: sentinel and sentinel Energy trip unit 1 ReadyToProtect indicator

WHAT TO DO

If one of the following alarms displays, the rating plug is faulty. Remove the external battery and replace the original rating plug or a new rating plug as described above.

If the problem persists, contact your Hager representative or local Hager technical support (contact details for your country can be found on the Hager website).



Fig. 10: sentinel trip unit

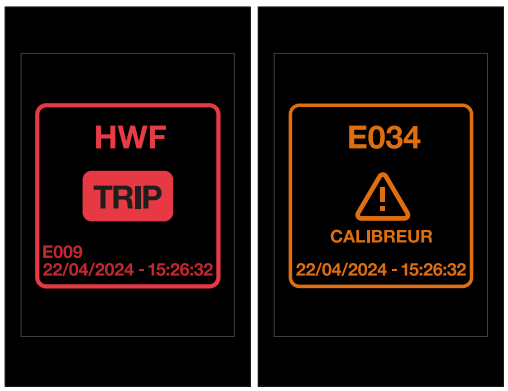

Fig. 11: sentinel Energy trip unit

	Action	Illustration
15	Remove the external battery.	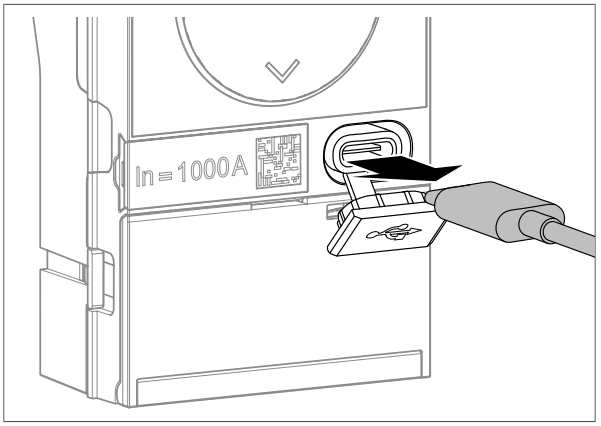
16	Close the USB-C port cover.	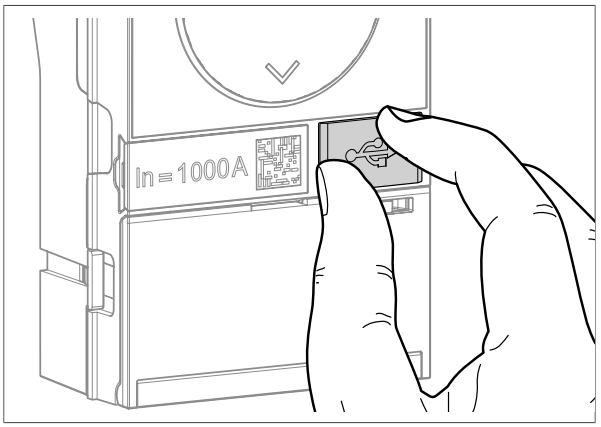
17	With a fixed circuit breaker, mount it again (see Chapter 6.6, Reassembling the fixed circuit breaker). At this stage, the circuit breaker is closed.	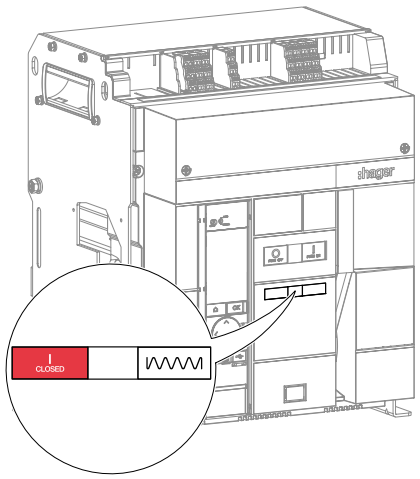

	Action	Illustration
18	For a drawout circuit breaker, follow the instructions below. Lower the charging handle.	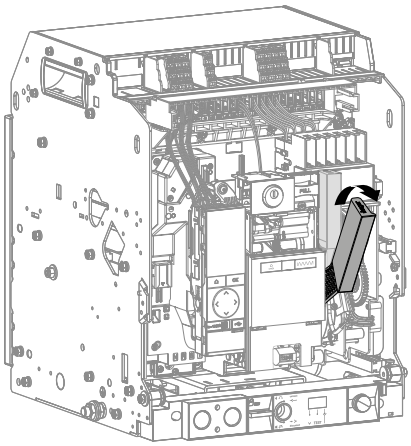
19	Put the front cover back on.	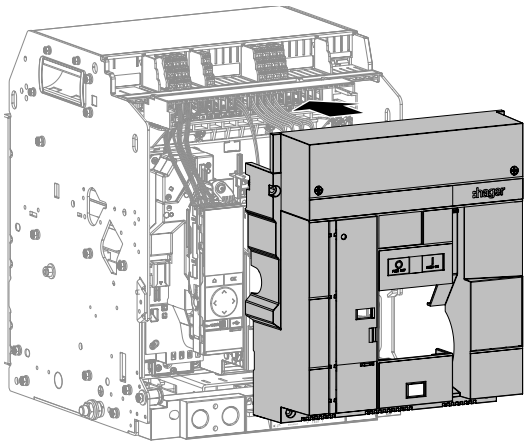
20	Retighten the 4 screws.	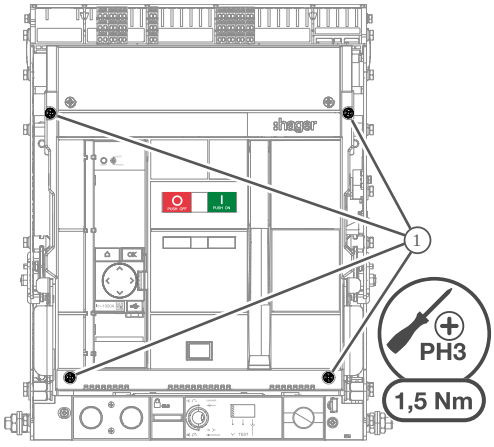

	Action	Illustration
21	Place it in the Connected position.	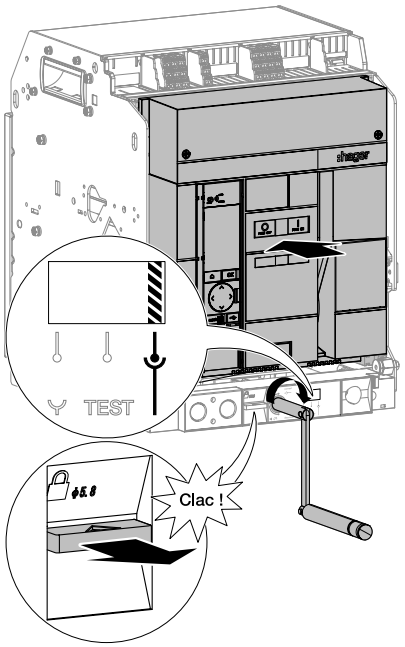
22	Close the transparent cover.	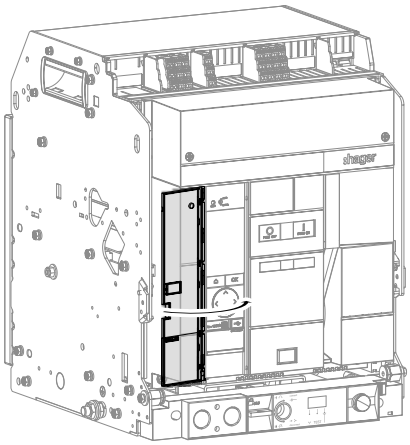
23	Apply a seal to the cover if necessary.	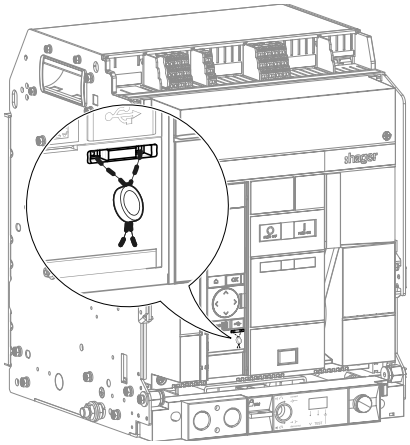

Warning

Risk of unexpected operation.

Before closing the transparent cover, recheck the protection settings (see Sentinel electronic trip unit 6LE009420A or Sentinel Energy electronic trip unit User Guide 6LE009417A).

6.8 Backup battery for electronic trip unit

When the low or missing battery indicator appears, the trip unit backup battery must be replaced. The backup battery can be replaced with the circuit breaker open or closed.



Fig. 12: sentinel trip unit

1 Low or missing battery indicator

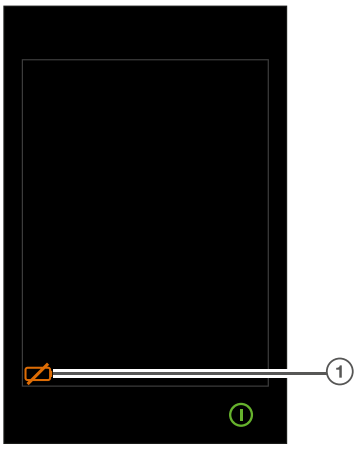

Fig. 13: sentinel Energy trip unit

1 Low or missing battery indicator

Information

If the backup battery is discharged, the trip unit will be unable to display the cause of any tripping unless an external 24V DC SELV power supply is connected to the TU terminals or an external battery is connected on the USB-C port of the trip unit.

To do so:

	Action	Illustration
1	If required, remove the seal to open the trip unit transparent cover.	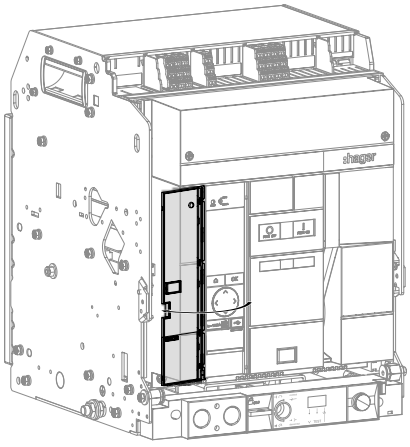

	Action	Illustration
2	Insert a screwdriver into the notch.	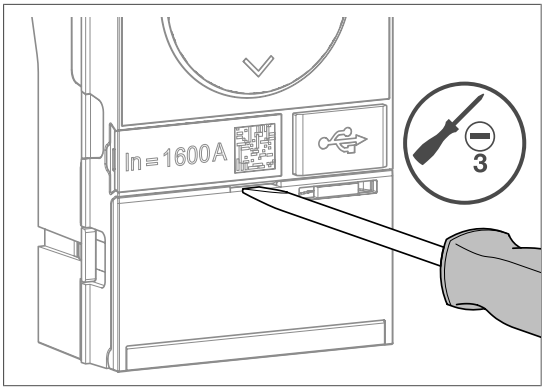
3	Then open the cover.	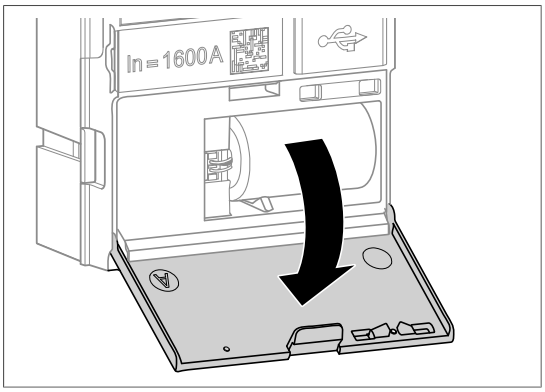
4	Remove the USB-C port cover.	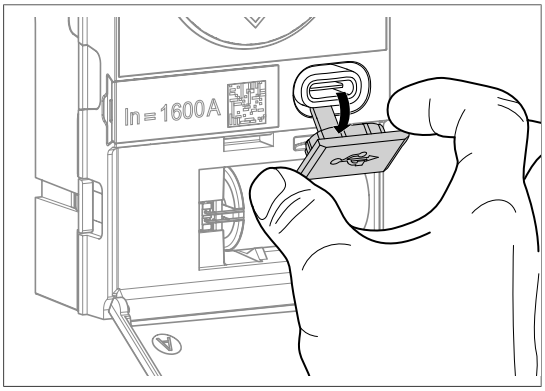
5	Then connect an external battery to the USB-C port to continue powering the trip unit's internal clock.	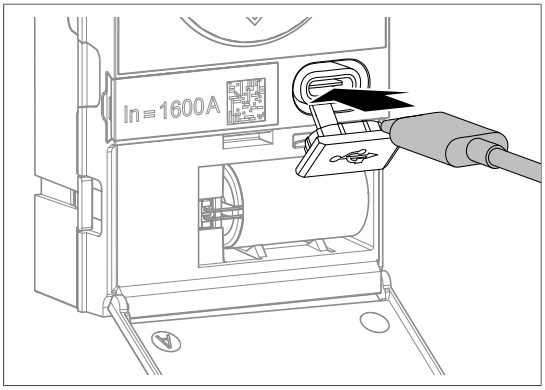

	Action	Illustration
6	Remove the old battery.	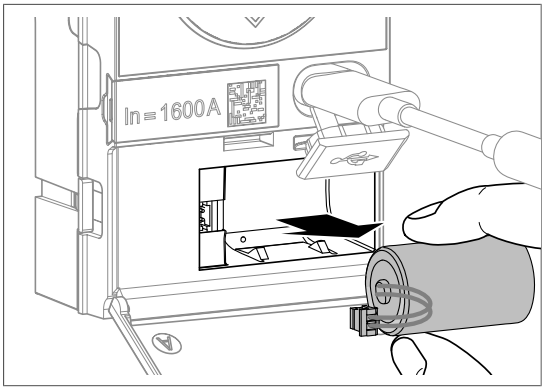
7	Replace it with a new battery.	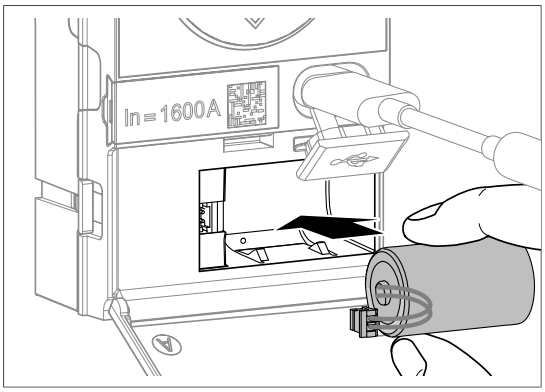

Caution

Improper handling may result in a fire or chemical reaction.

- Do not handle the battery without protective equipment if you detect leaking electrolyte or if heat is given off.
- To guarantee reliability, personal safety and material security, use only the Hager battery HWW463H, which is available as an accessory.

Place the old battery only in a place intended for recycling.

Notice

Risk of mechanical damage.

Position the back-up battery and its wiring correctly inside the housing, then close the hatch.

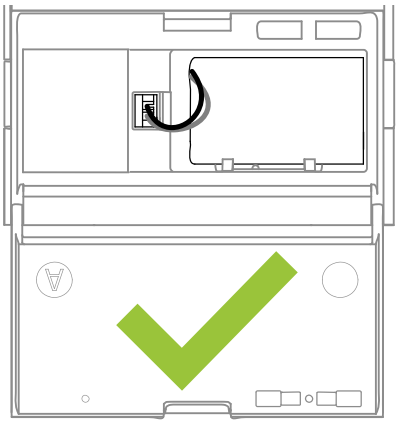

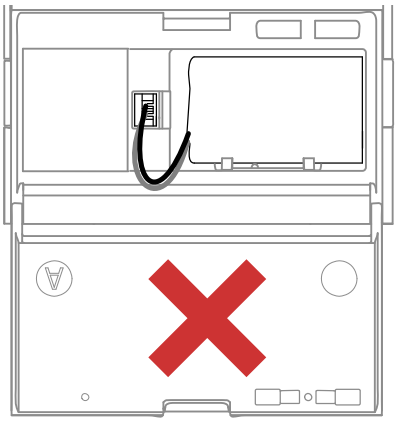

	Action	Illustration
8	Wait for the standby screen to be displayed or the live mode and for the battery low or absent indicator to appear. Briefly press the button **OK** to acknowledge the low or missing battery indicator. On a sentinel trip unit or on a sentinel Energy trip unit.	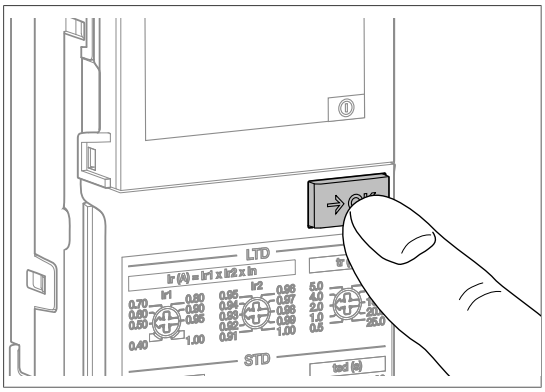 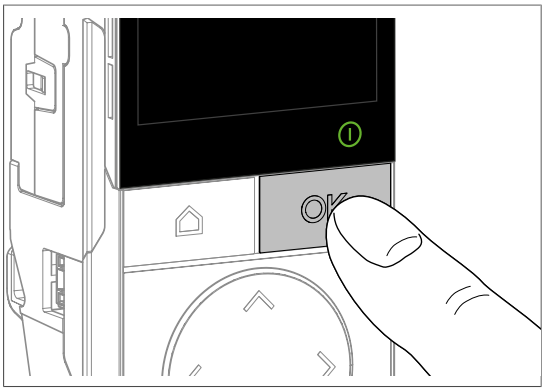

	Action	Illustration
9	Check that the battery low or absent indicator disappears after 5 seconds.	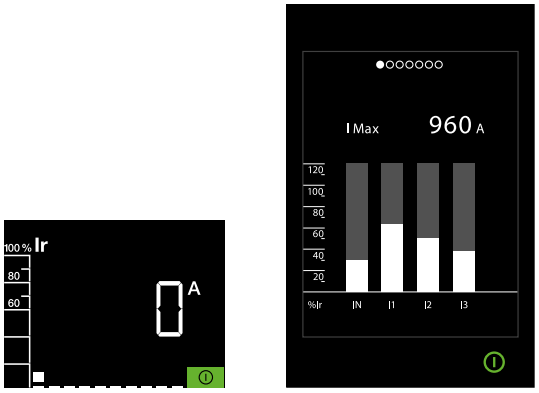

Fig. 14: sentinel and sentinel Energy trip unit

WHAT TO DO

- **If the battery low or absent indicator does not disappear,** resume the procedure from instruction 8. If the problem persists, begin the procedure again with a new battery.
- **If an error indicator or alarm appears,** refer to Troubleshooting Guide 6LE009769A.

	Action	Illustration
10	Remove the external battery.	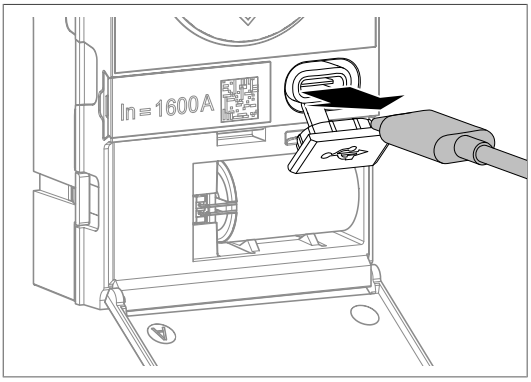
11	Close the USB-C port cover.	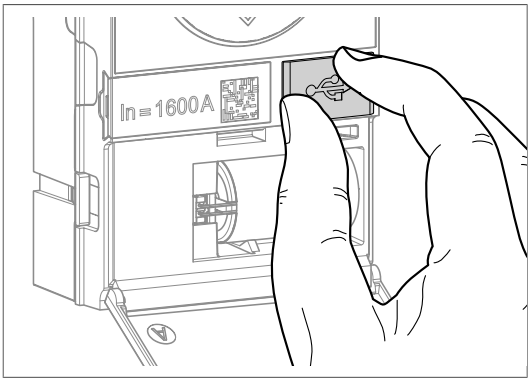

	Action	Illustration
12	Close the cover.	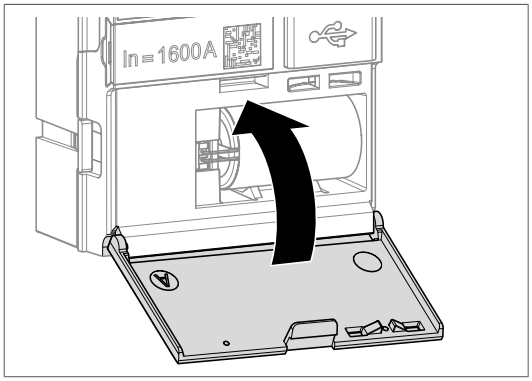
13	Close the transparent cover.	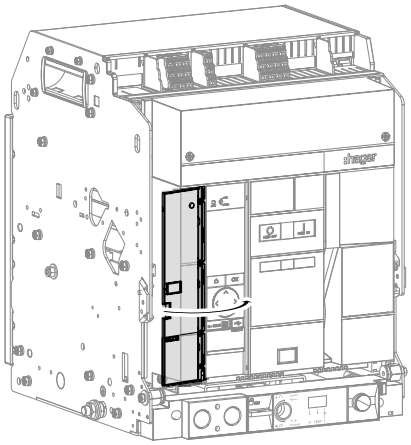
14	Apply a seal to the cover if necessary.	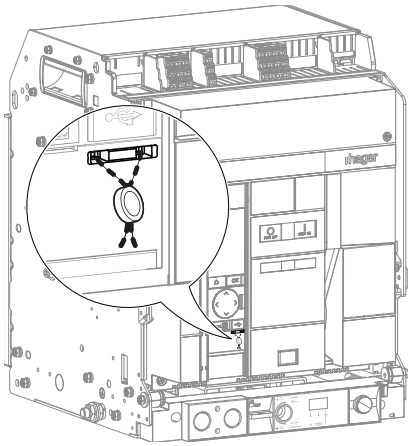

Warning

Risk of unexpected operation.

Before closing the transparent cover, recheck the protection settings (see Sentinel electronic trip unit 6LE009420A or Sentinel Energy electronic trip unit User Guide 6LE009417A).

6.9 Electronic trip unit display

Remove the circuit breaker first (see Chapter 6.1, Removal of the drawout circuit breaker or see Chapter 6.4, Disassembling the fixed circuit breaker) then follow the instructions below:

	Action	Illustration
1	Disconnect all connectors on the top of the trip unit: • On a sentinel Energy trip unit:	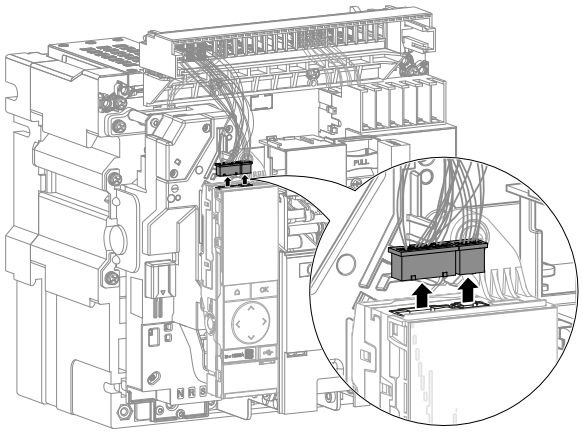
	• On a sentinel trip unit:	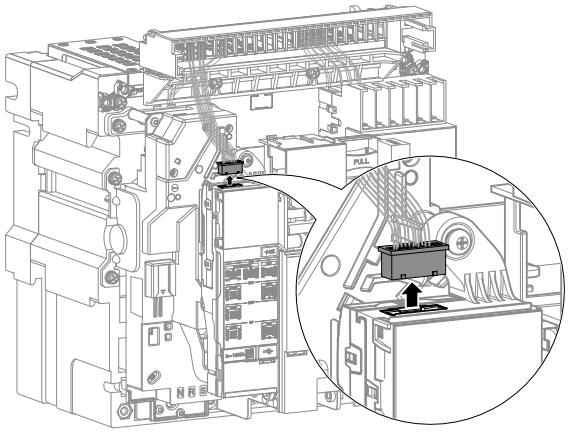
2	If the circuit breaker is equipped : • An OAC alarm output contacts module, remove its connector,	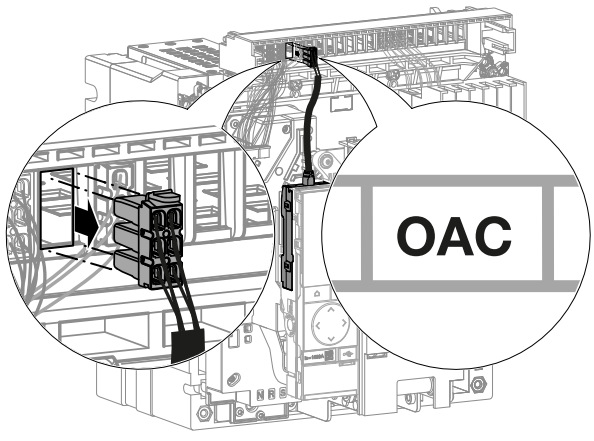

	Action	Illustration
2	*(continued)* • an INS isolation module, remove its connector,	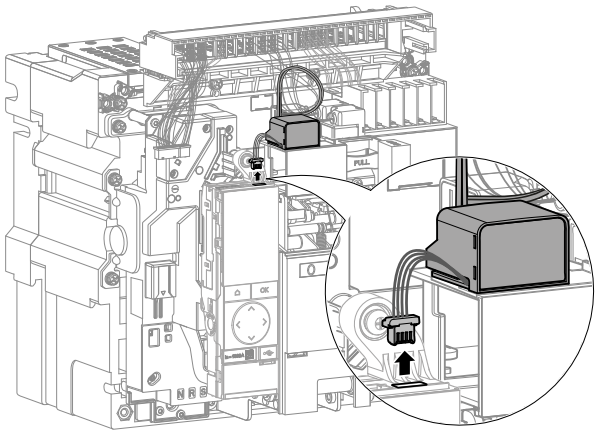
	• a position sensor for COM (PSE), remove the connector on the side.	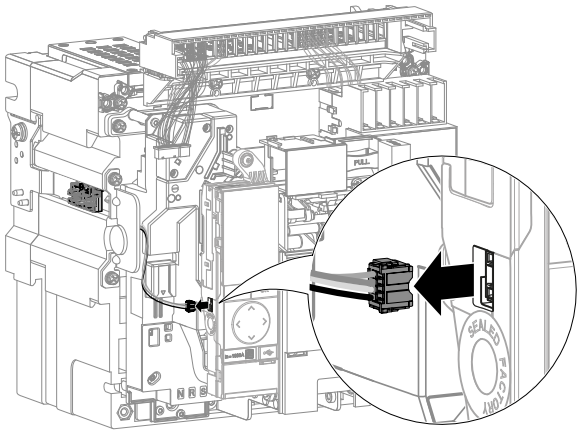
3	Remove the screw.	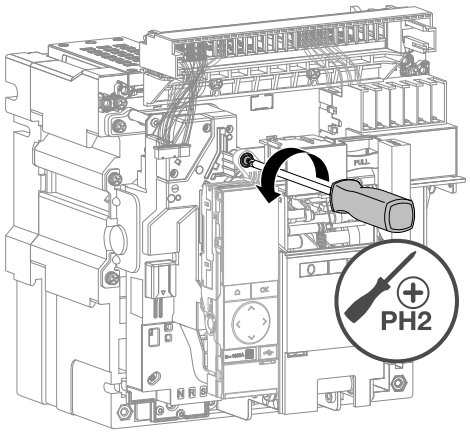

	Action	Illustration
4	Remove the trip unit from its housing. Be careful not to disconnect the cables on the back of the trip unit that connect the trip unit to the circuit breaker.	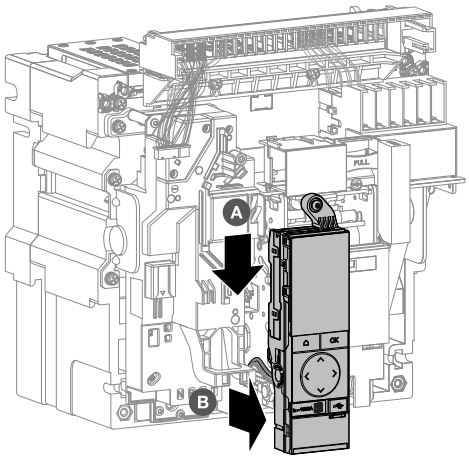
5	Unclip the display to be replaced using a small flat screwdriver.	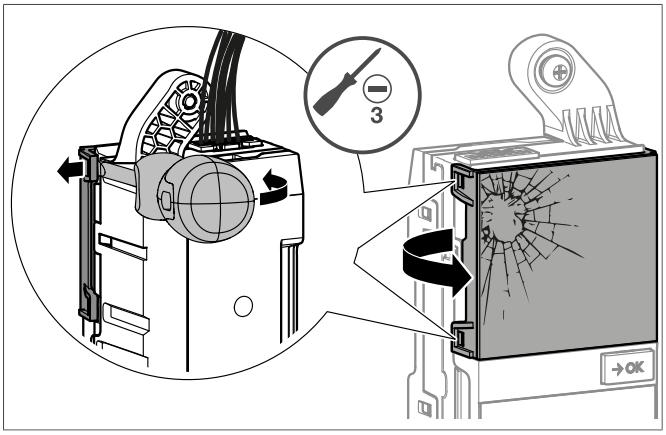
6	Then remove it.	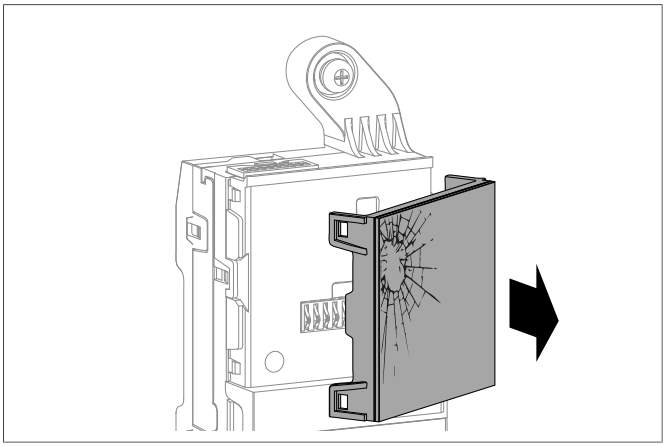

	Action	Illustration
7	Apply Berulub FK 164-2 grease to the connectors of the trip unit.	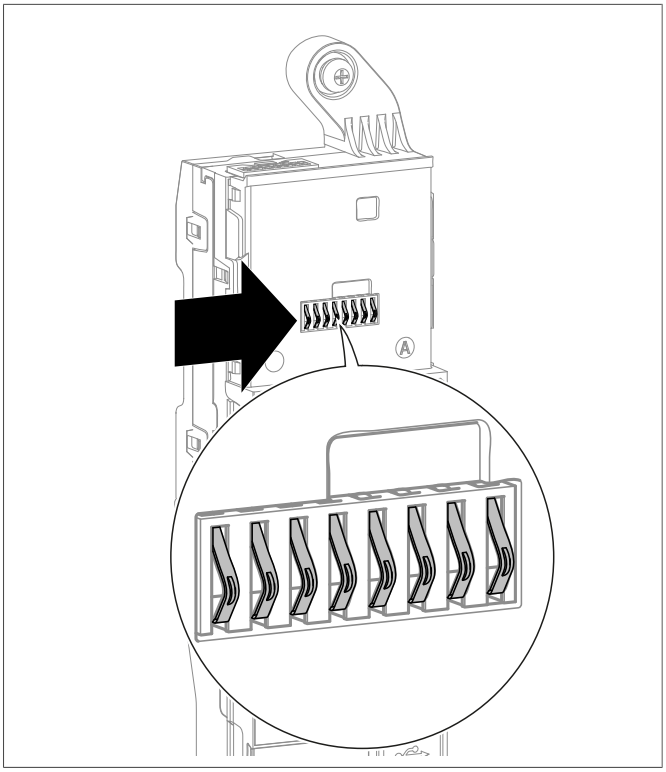
8	Position the new display.	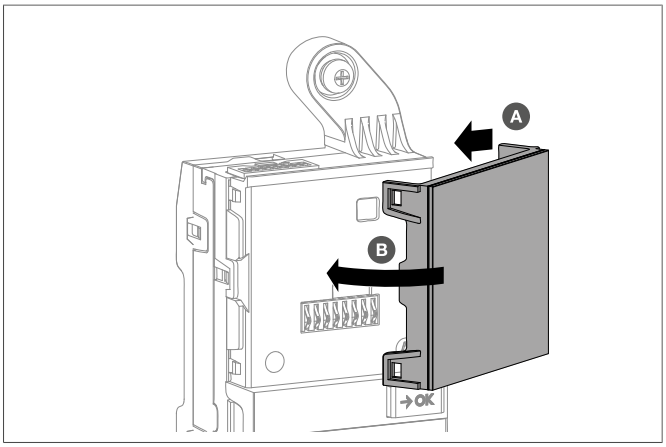
9	Then clip it onto the electronic trip unit.	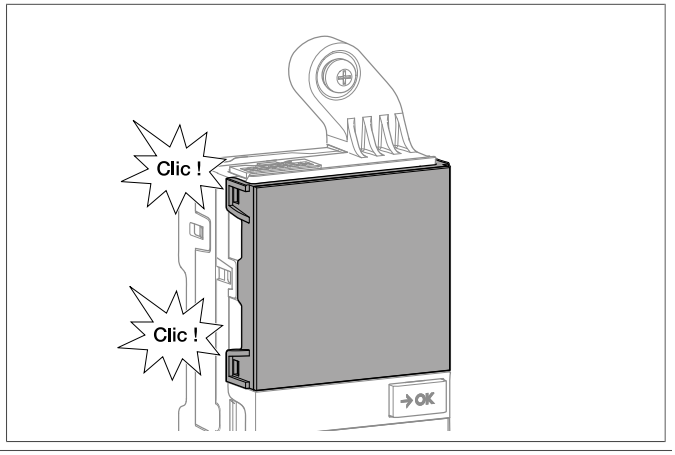

	Action	Illustration
10	Put the trip unit back in its housing.	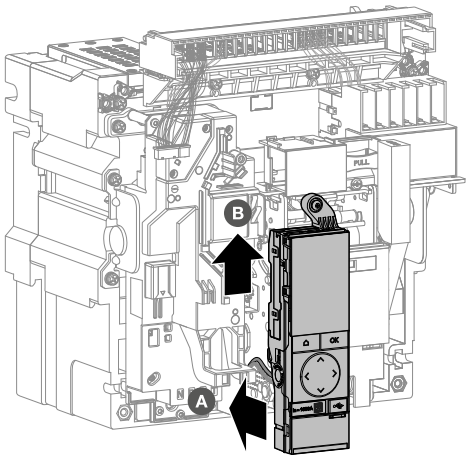

Notice

Risk of mechanical damage.

Be careful that the cables are not stuck when reassembling the trip unit.

	Action	Illustration
11	Put the screw back on the trip unit.	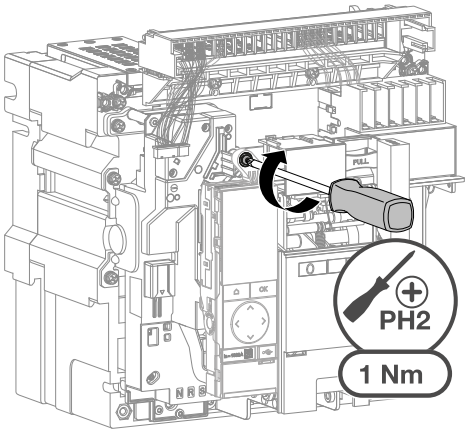

	Action	Illustration
12	If the circuit breaker is equipped : • an OAC alarm output contact module, refit its connector,	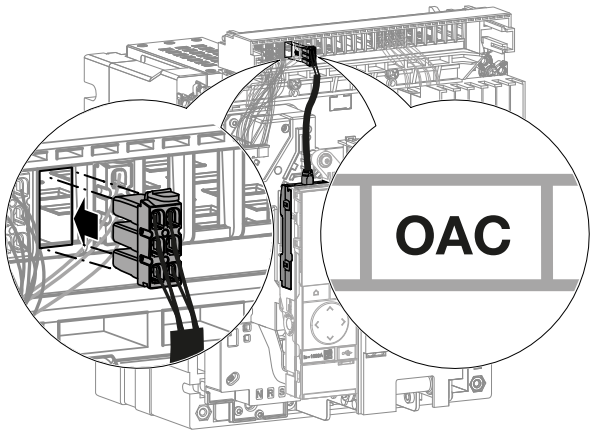
	• an INS isolation module, refit its connector,	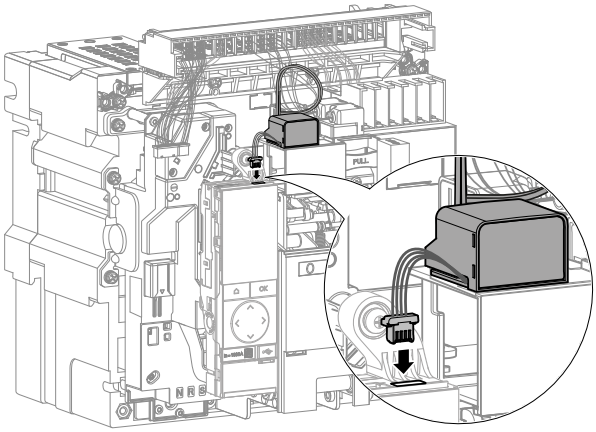
	• a position sensor for COM (PSE), clip the connector to the side.	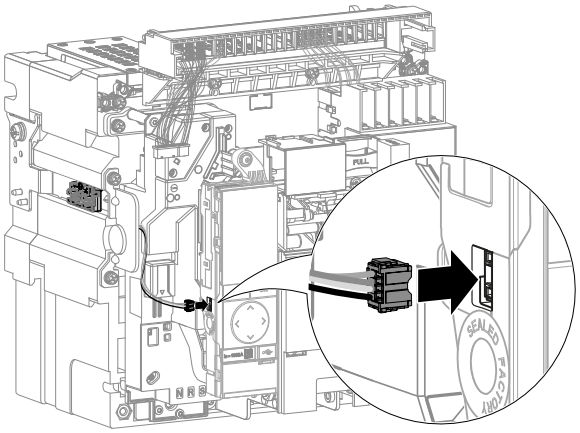

	Action	Illustration
13	Reconnect all connectors at the top of the trip unit: • On a sentinel Energy trip unit:	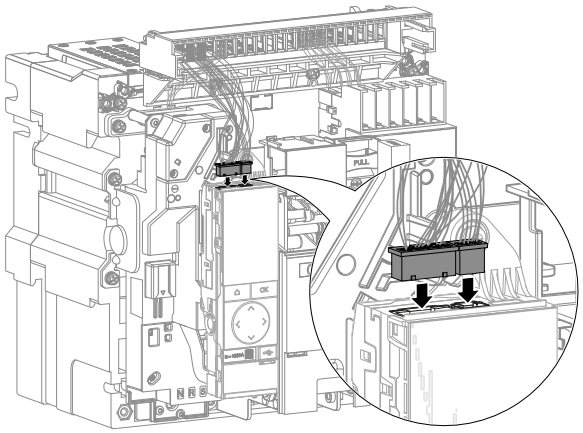
	• On a sentinel trip unit:	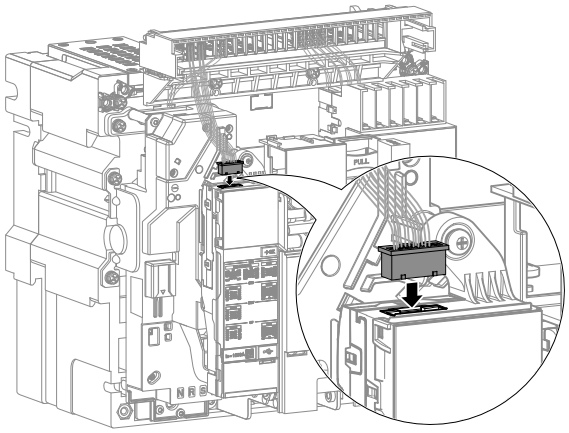
14	Remove the USB-C port cover.	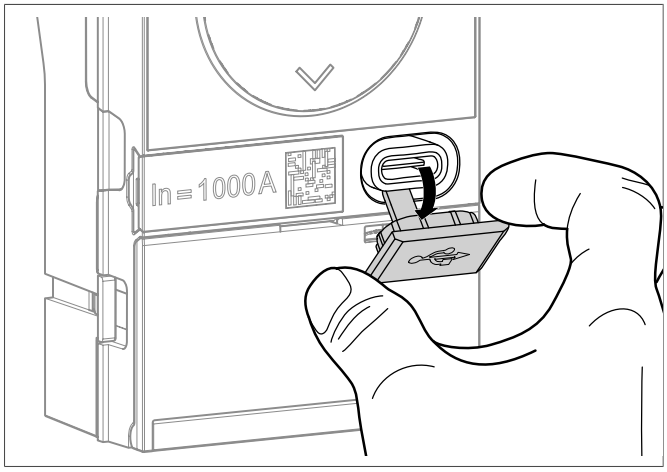

	Action	Illustration
15	Connect the external battery to the USB-C port.	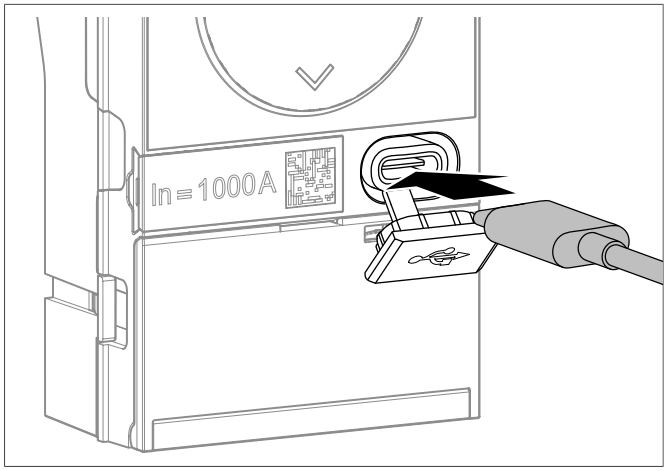
16	Verify that: • On a sentinel trip unit, the screen lights up and the ReadyToProtect indicator displays, indicating that the new display has been taken into account. • On a sentinel Energy trip unit, the screen briefly displays the message :hager and the ReadyToProtect indicator lights up.	 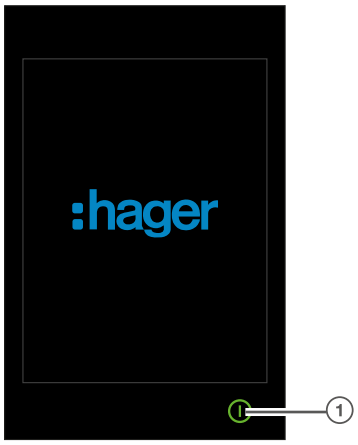 ① ReadyToProtect indicator

WHAT TO DO

If an error indicator or alarm appears, refer to Troubleshooting Guide 6LE009769A.

	Action	Illustration
17	Briefly press the key →OK on a sentinel trip unit or OK on a sentinel Energy trip unit.	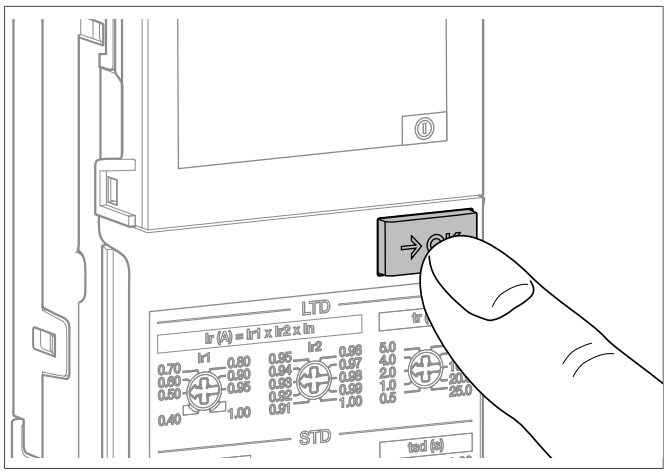 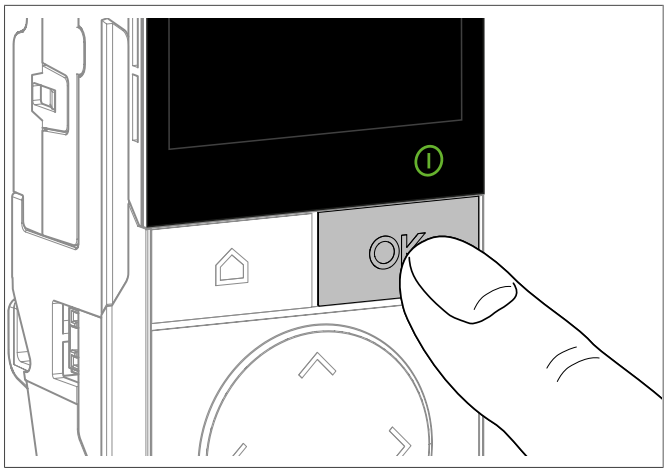
18	At this level, each brief press on the button →OK of a sentinel trip unit or OK of a sentinel Energy trip unit switches the display from one screen to the other in the order shown below. Check to ensure that the display on the different screens is correct.	See the order of the screens on the next page.

sentinel electronic trip unit

The order of the screens described corresponds to the LSIG trip unit model.

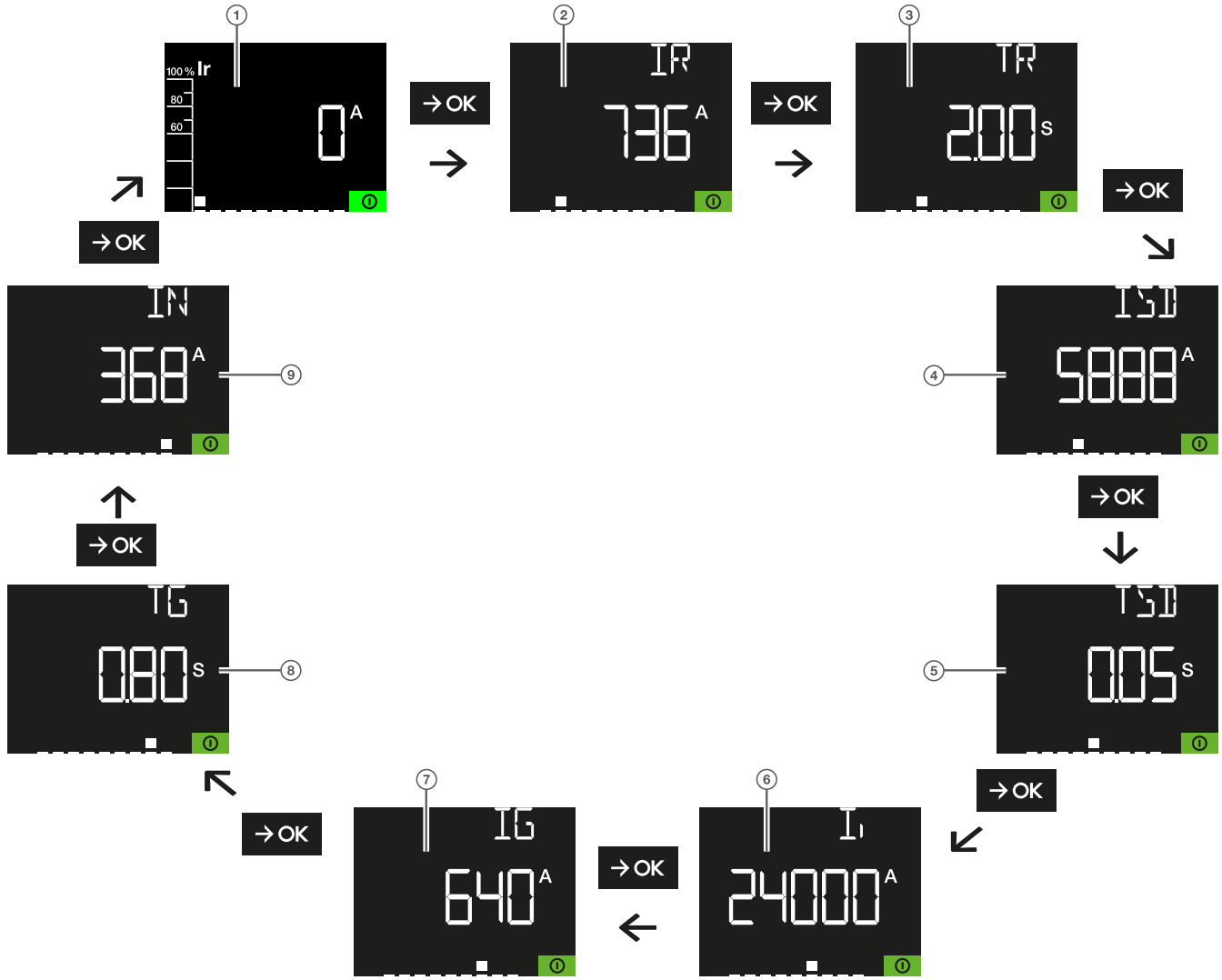

1. Maximum current flowing through the circuit breaker as well as the phase in question
2. Long Time Delay protection threshold
3. Long Time Delay
4. Short Time Delay protection threshold
5. Short Time Delay
6. Instantaneous protection threshold
7. Ground protection threshold
8. Ground Fault protection time delay
9. Neutral protection threshold

WHAT TO DO

In case of error, an additional screen appears first. The error indicator also appears on all the screens.

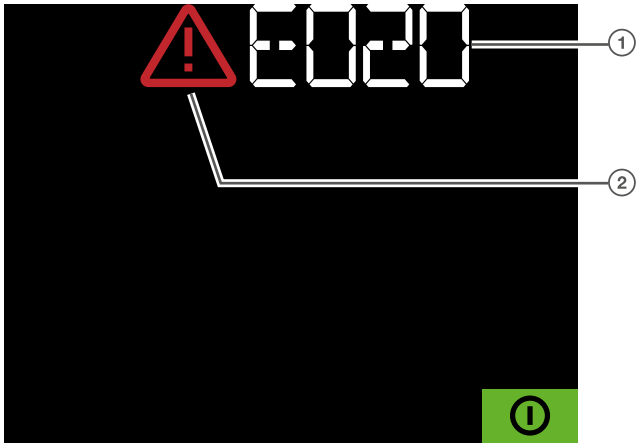

1. Error code
2. Error indicator

If an error indicator or alarm appears, refer to Troubleshooting Guide 6LE009769A.

sentinel Energy electronic trip unit

The order of the screens described corresponds to the LSIG trip unit model.

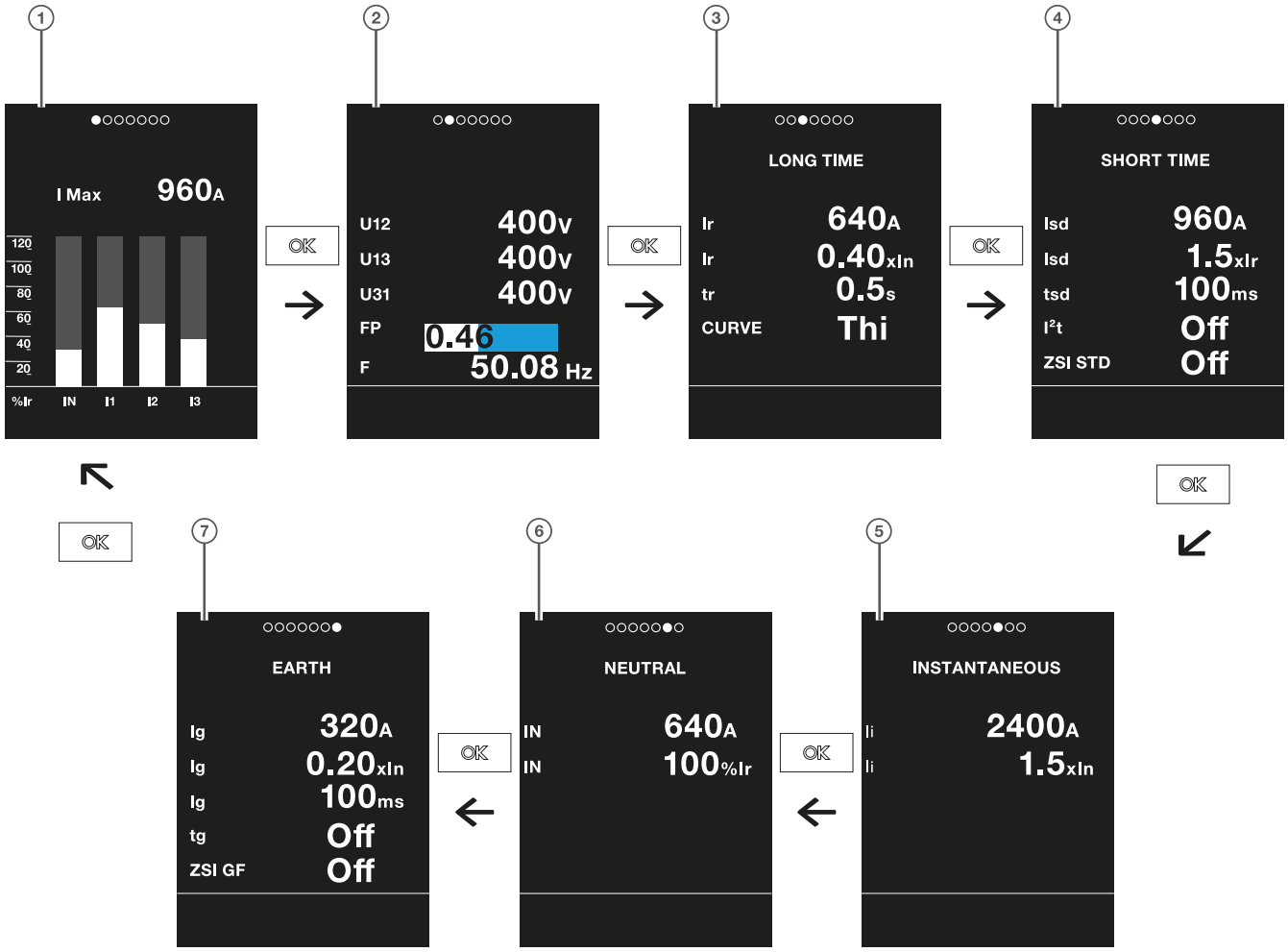

1. Maximum current flowing through the circuit breaker as well as the phase in question
2. Voltage between the poles
3. Long Time Delay Protection
4. Short Time Delay Protection
5. Instantaneous protection
6. Neutral protection
7. Ground protection

WHAT TO DO

When an error occurs, a screen of this type appears:



Press the button OK to see detailed information about the error.

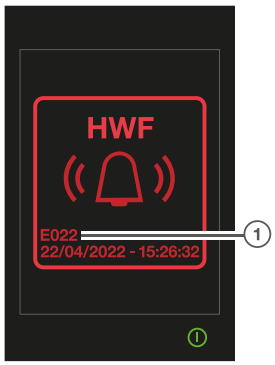

The error indicator also appears on all the screens.

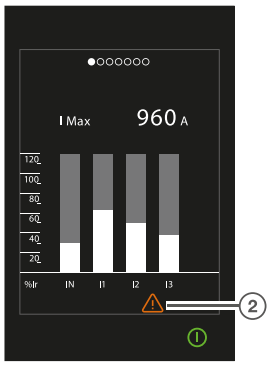

1 Error code

2 Error indicator

If an error indicator or alarm appears, refer to Troubleshooting Guide 6LE009769A.

	Action	Illustration
19	Remove the external battery.	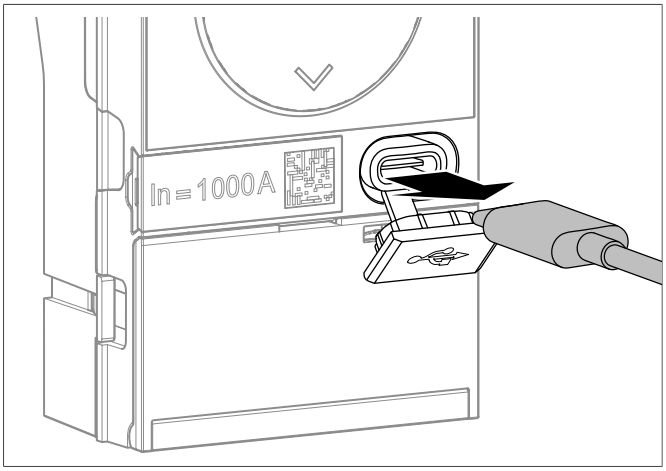
20	Close the USB-C port cover.	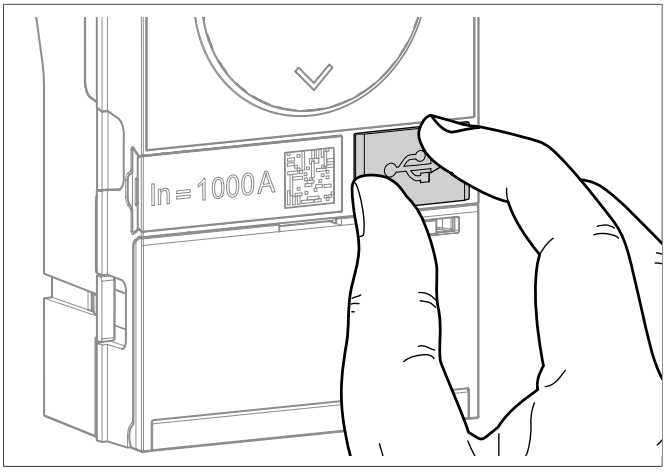

	Action	Illustration
21	Refit the circuit breaker (see Chapter 6.3, Put back in place the drawout circuit breaker or see Chapter 6.6, Reassembling the fixed circuit breaker). When the re-installation steps are complete, the circuit breaker is closed.	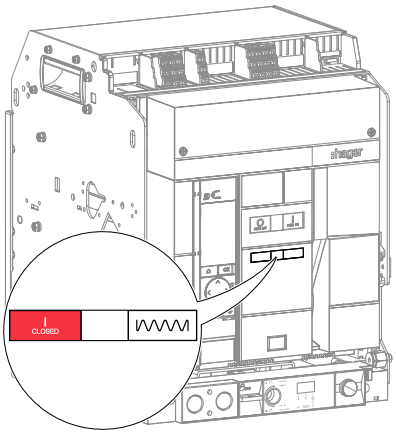

6.10 TB connection terminal block

For the installation of a TB connection terminal block

Follow the installation instructions described in the 6LE009031A manual provided with the product.

For the replacement of a TB connection terminal block on a drawout circuit breaker

First remove the circuit breaker from its chassis (see Chapter 6.1, Removal of the drawout circuit breaker , instructions 1 to 8) then follow the instructions below:

Danger

Danger to life, risk of injury due to electric shock, or risk of serious injury.

Cut off power to the accessories before carrying out any work on the TB connection terminals**.**

	Action	Illustration
1	If necessary, unclip the protection cover from the terminal blocks.	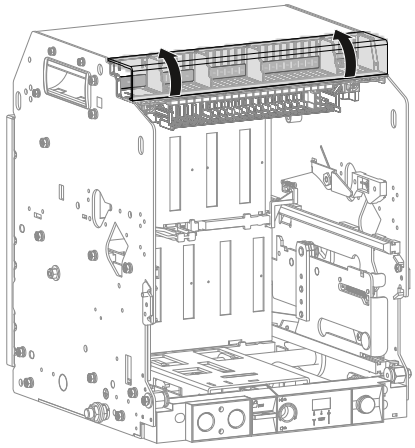
2	Unscrew the 2 screws by a quarter of a turn ...	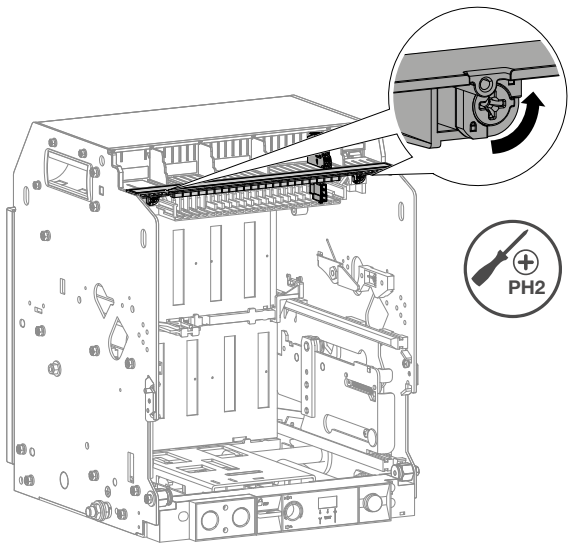

	Action	Illustration
2	*(continued)* then remove the terminal strip.	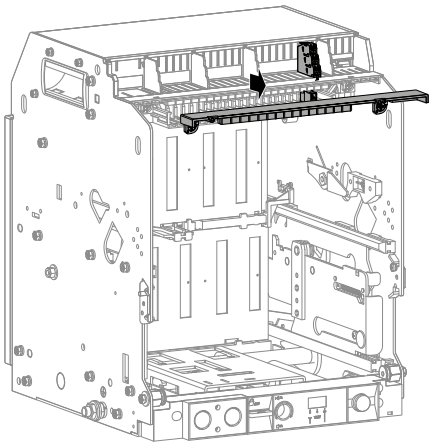
3	Press the rear part while pulling on the TB terminal block to remove it.	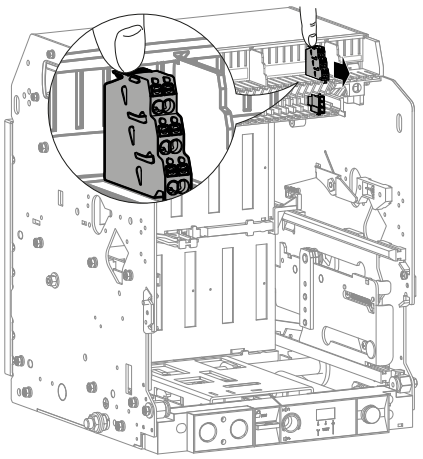 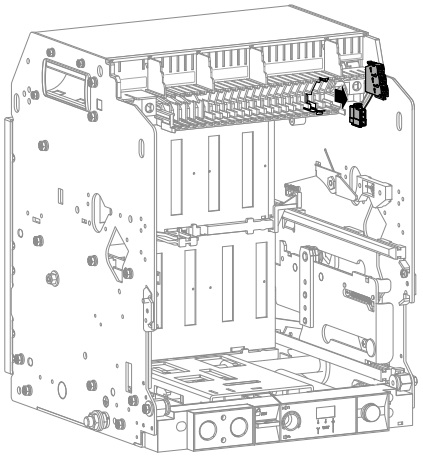

	Action	Illustration
4	Correctly place the wiring of the new TB connection terminal block.	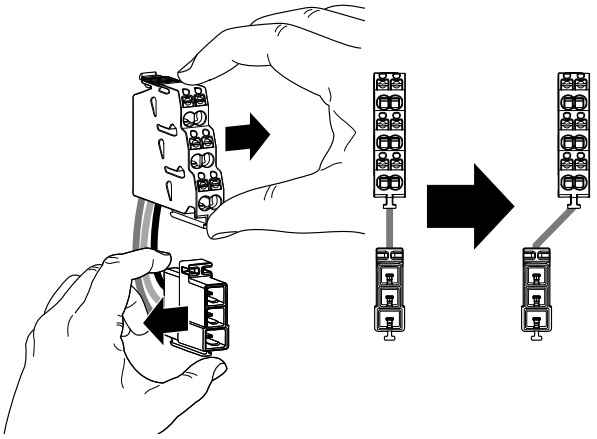
5	Clip the new TB connection terminal block onto its support.	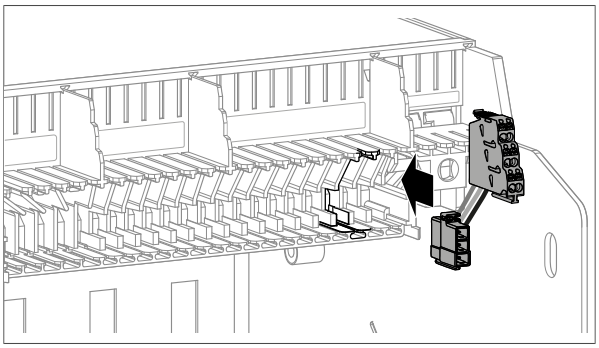 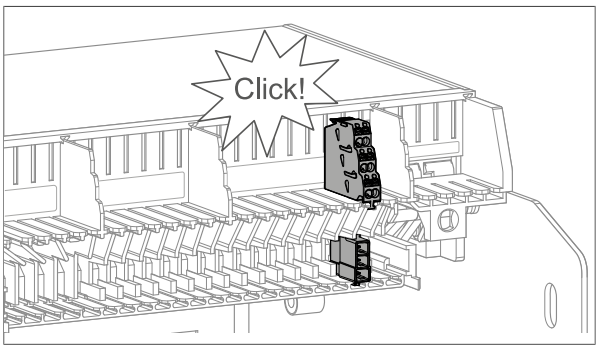
6	Replace the terminal strip...	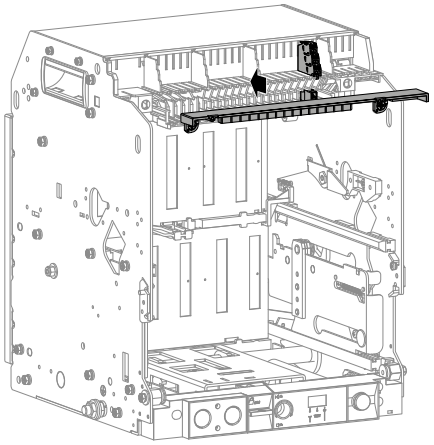

	Action	Illustration
6	*(continued)* then turn the 2 screws by a quarter of a turn.	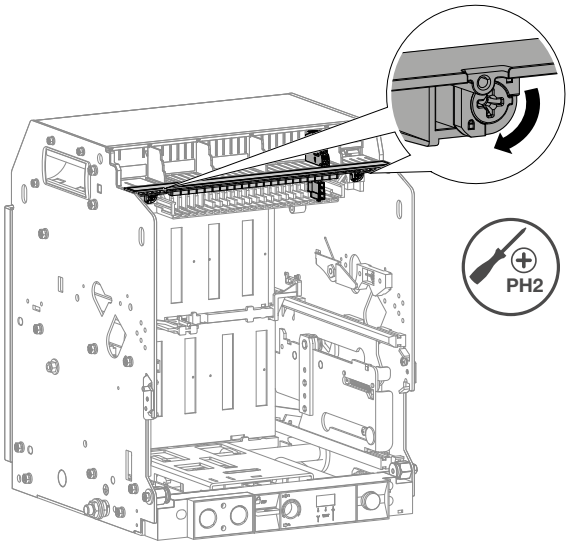
7	Insert the circuit breaker into its chassis (see Chapter 6.3, Put back in place the drawout circuit breaker , instructions 11 to 21). When the re-installation steps are complete, the circuit breaker is closed.	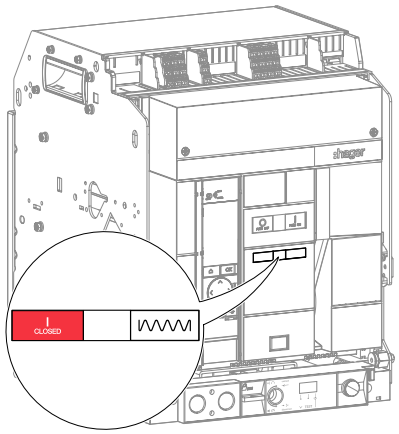
8	Clip the protection cover on to the terminal block.	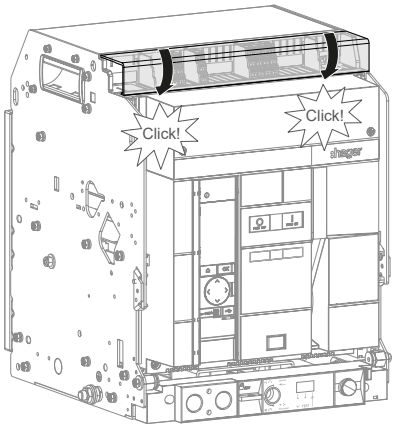

For the replacement of a TB connection terminal block on a fixed circuit breaker

First disassemble the circuit breaker (see Chapter 6.4, Disassembling the fixed circuit breaker) then follow the instructions below:

	Action	Illustration
1	If necessary, unclip the protection cover from the terminal block.	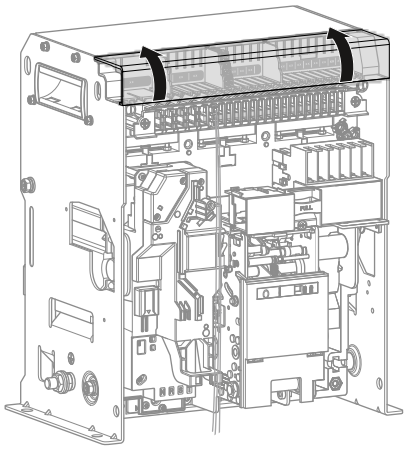
2	Unlock the bottom terminal strip by unscrewing the 2 screws by a quarter turn. then remove the terminal strip.	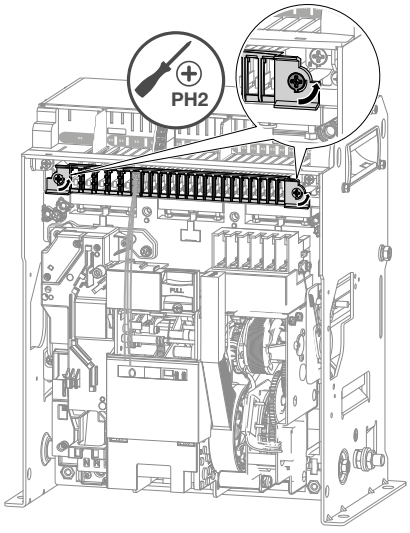 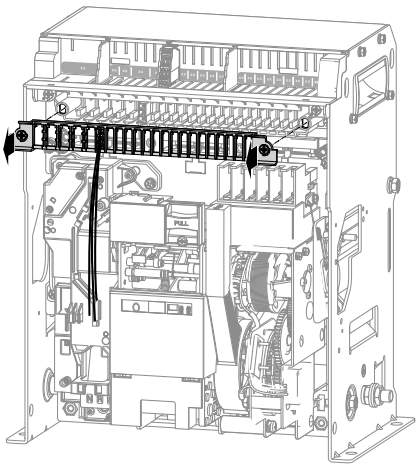

	Action	Illustration
3	Unlock the rear terminal strip by unscrewing the 2 screws by a quarter turn...	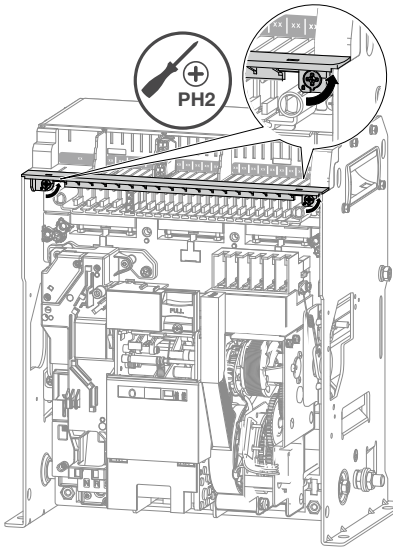
	then remove the terminal strip.	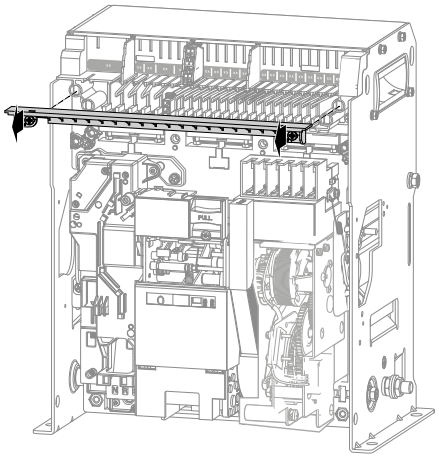
4	Press the rear part while pulling on the TB terminal block to remove it.	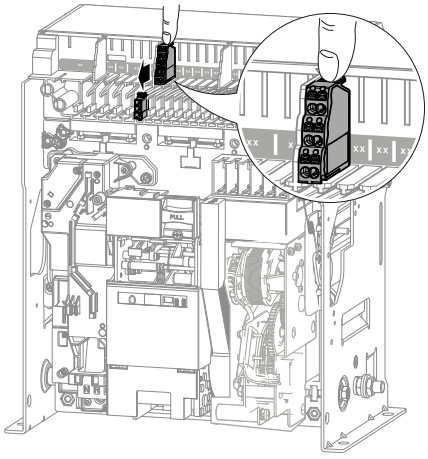

	Action	Illustration
4	*(continued)*	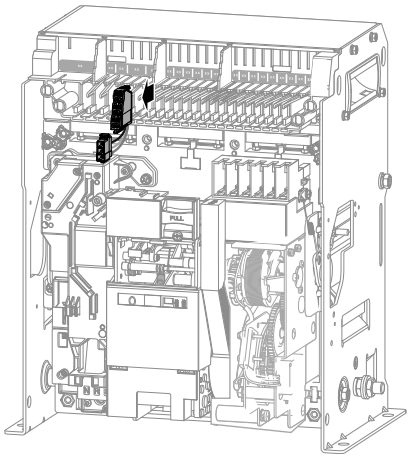
5	Correctly place the wiring of the new TB connection terminal block.	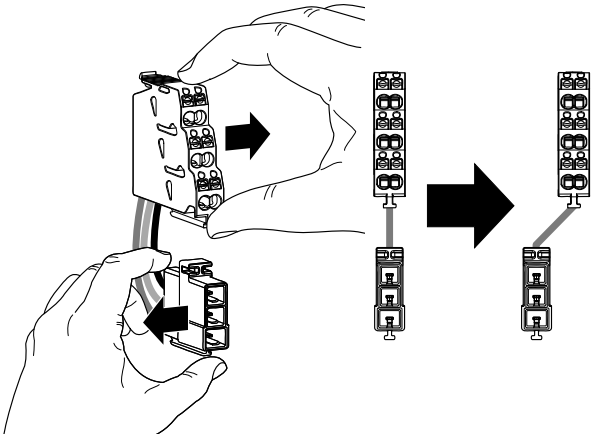
6	Clip the new TB connection terminal block onto its support.	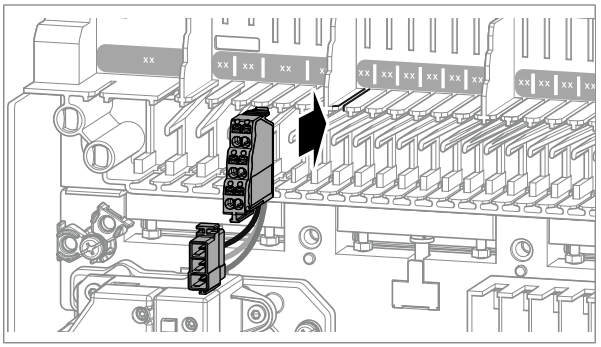 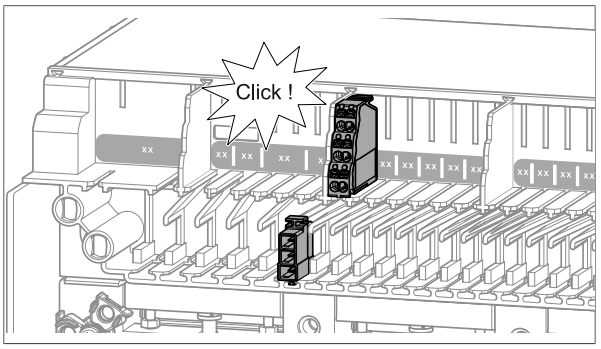

	Action	Illustration
7	Put back the rear terminal strip...	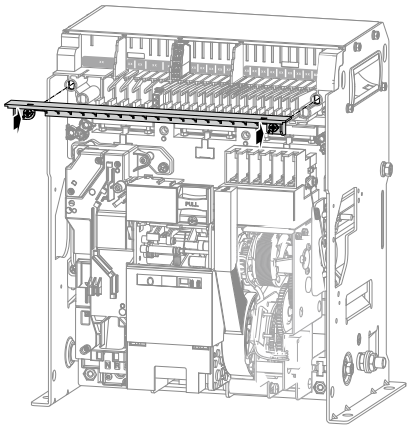
	then turn the 2 screws by a quarter of a turn.	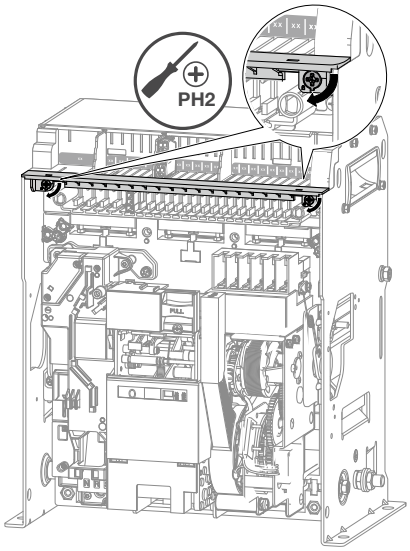
8	Put back the bottom terminal strip...	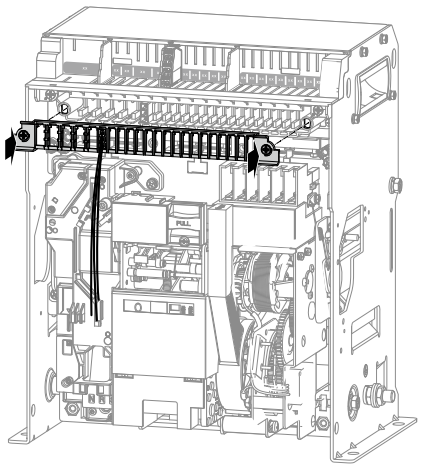

	Action	Illustration
8	*(continued)* then turn the 2 screws by a quarter of a turn.	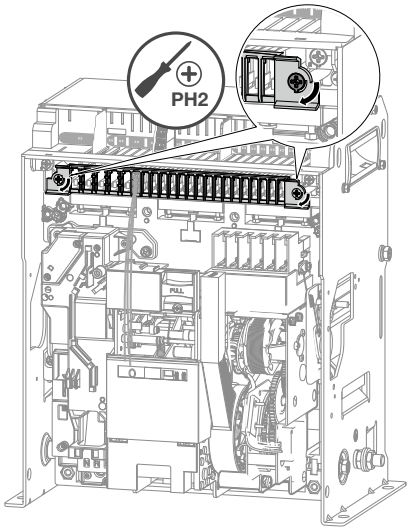
9	Refit the circuit breaker (see Chapter 6.6, Reassembling the fixed circuit breaker). When the re-installation steps are complete, the circuit breaker is closed.	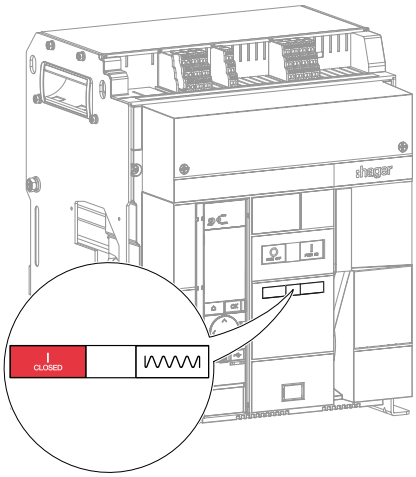
10	Clip the protection cover on to the terminal block.	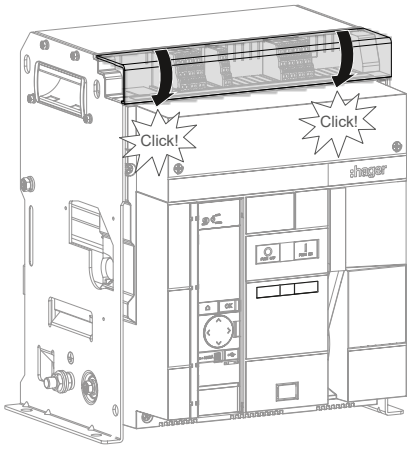

6.11 OAC Output Alarm Contact module

For the installation of the OAC alarm output contacts module

Follow the installation instructions described in manual 6LE009032A, which is supplied with the product, then install a TB terminal block connection as described in manual 6LE009031A.
Then proceed to instructions 5 and 6 below.

For the replacement of the OAC alarm output contacts module

Remove the circuit breaker first (see Chapter 6.1, Removal of the drawout circuit breaker or see Chapter 6.4, Disassembling the fixed circuit breaker) then follow the instructions below:

	Action	Illustration
1	Remove the connector from the OAC alarm output contacts module to be replaced.	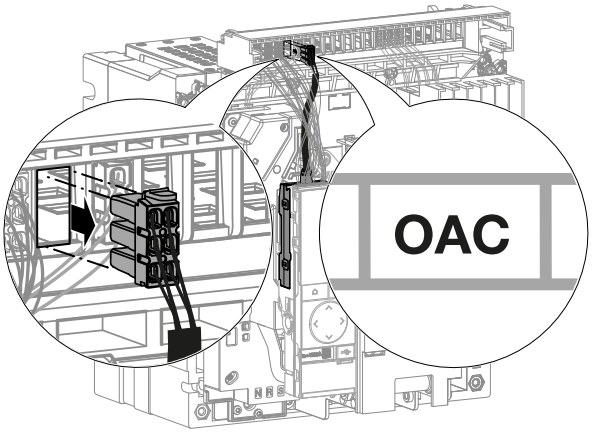
2	Remove the defective OAC alarm output contacts module.	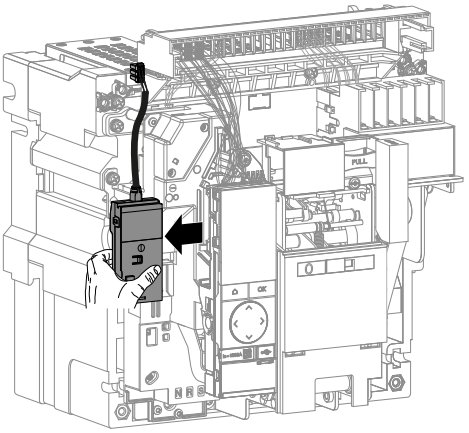
3	Clip on the new OAC output alarm contacts module.	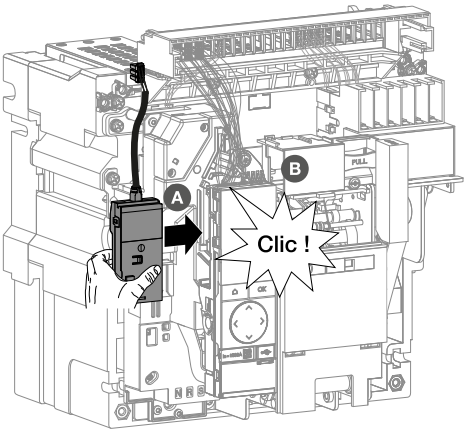

	Action	Illustration
4	Clip a TB connection terminal block, reference number HWY952H onto the OAC output alarm module connections.	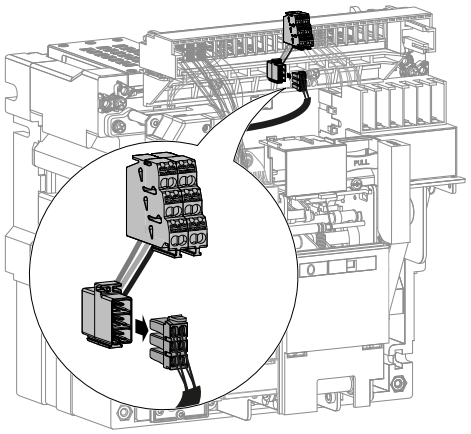
5	Connect a PC that is equipped with software **Hager Power setup** to the USB-C socket of the trip unit.	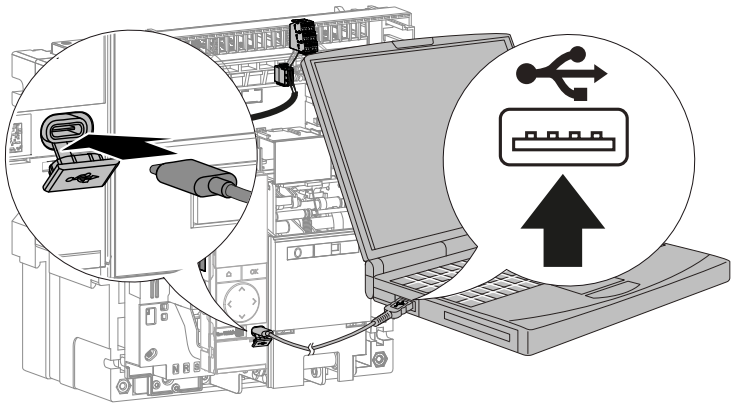
6	• Go to the test menu in the **Hager Power set-up** software then choose the OAC contacts test. • Click on the corresponding button to force the closing of the output contact to be tested.	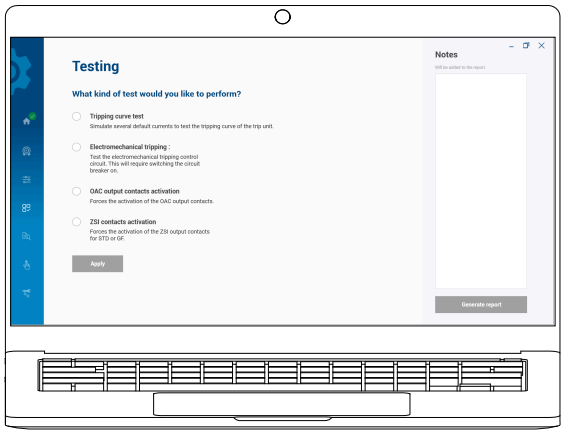
	• Check the closure of each OAC output contact on the terminal block TB using an ohm-meter.	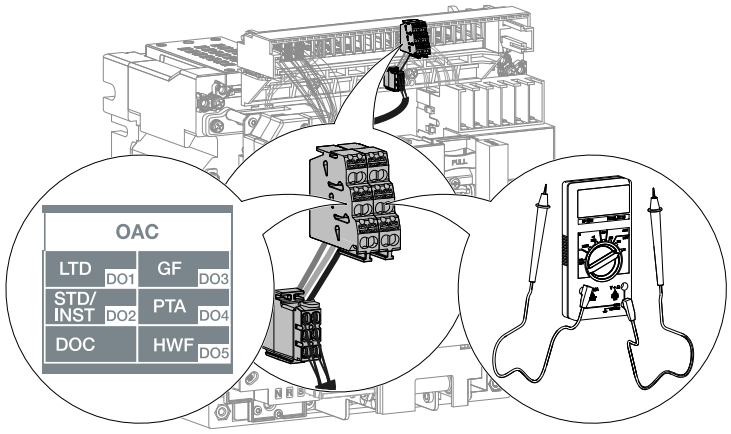

	Action	Illustration
		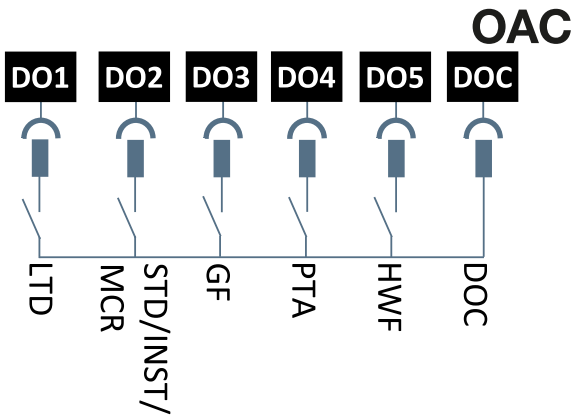
7	Remove the TB connection terminal block from the OAC output alarm module connections.	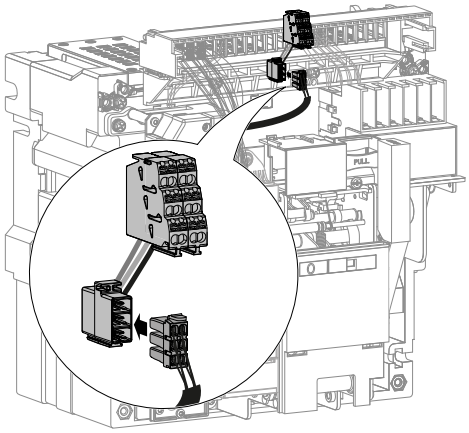
8	Remove the PC equipped with the software **Hager Power setup** from the USB-C socket of the trip unit.	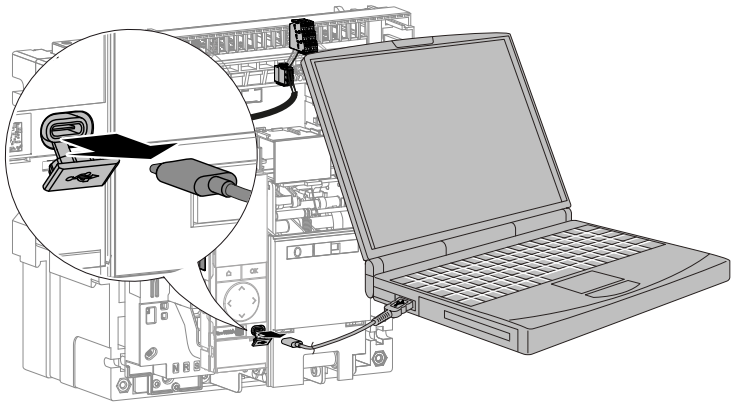
9	Clip the connector of the new OAC output alarm contacts module onto the terminal block, which is marked OAC.	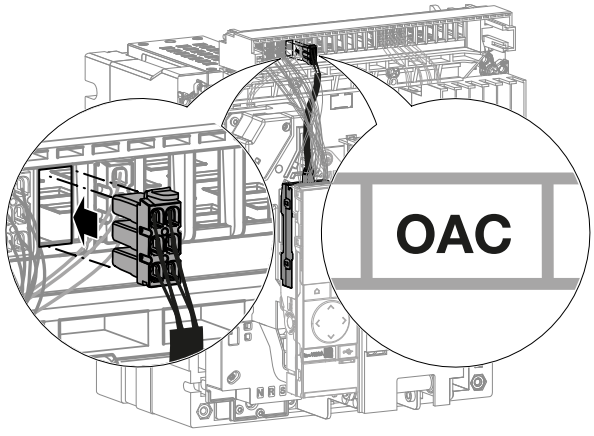

	Action	Illustration
10	Refit the circuit breaker (see Chapter 6.3, Put back in place the drawout circuit breaker or see Chapter 6.6, Reassembling the fixed circuit breaker). When the re-installation steps are complete, the circuit breaker is closed.	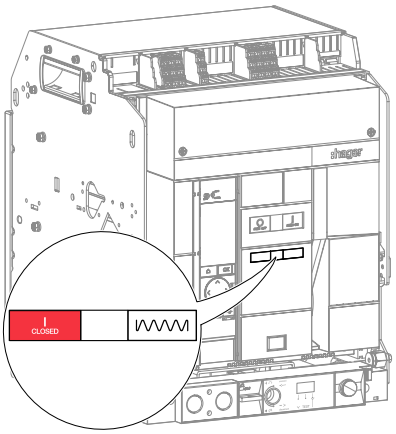

Information

An external 24V CC SELV power supply (recommended reference model Hager HTG911H), which is to be connected to the TU terminal blocks of the hw+ circuit breaker, is required for the use of the OAC alarm output contacts module.

6.12 AX Auxiliary Contact

For the installation of an AX auxiliary contact

Follow the installation instructions described in manual 6LE007866A, which is supplied with the product, then install a TB terminal block connection as described in manual 6LE009031A. Then proceed to instructions 6 to 10 below.

For the replacement of an AX auxiliary contact

Remove the circuit breaker first (see Chapter 6.1, Removal of the drawout circuit breaker or see Chapter 6.4, Disassembling the fixed circuit breaker) then follow the instructions below:

❶ **Replacement of an optional AX auxiliary contact from AX5 to AX10/vN (HW2) and AX5 to AX12/vN (HW4).**

	Action	Illustration
1	Remove the connector from the AX auxiliary contact to be replaced.	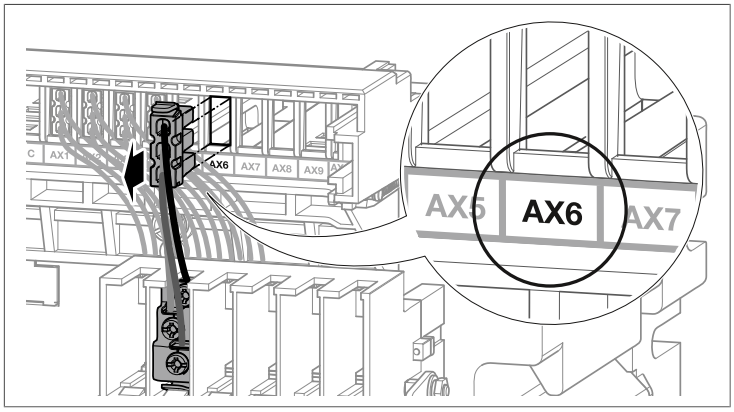
2	Remove the faulty AX auxiliary contact by pressing its tab.	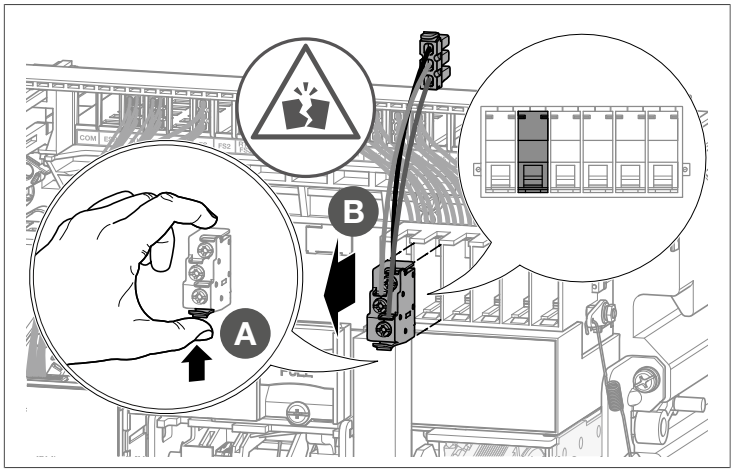

	Action	Illustration
3	Clip on the new AX auxiliary contact.	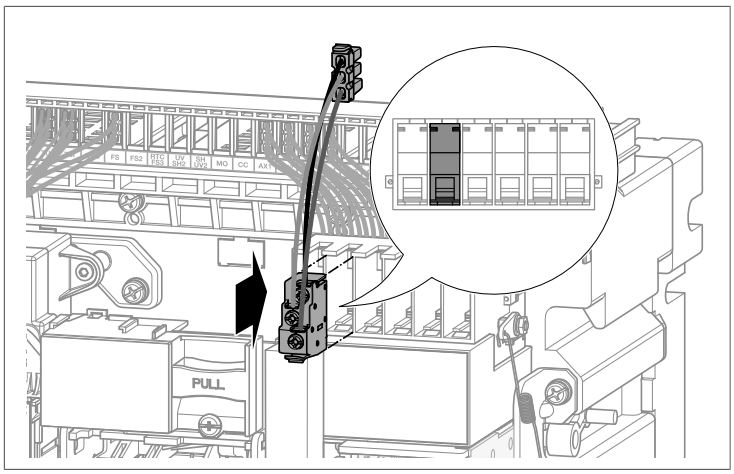 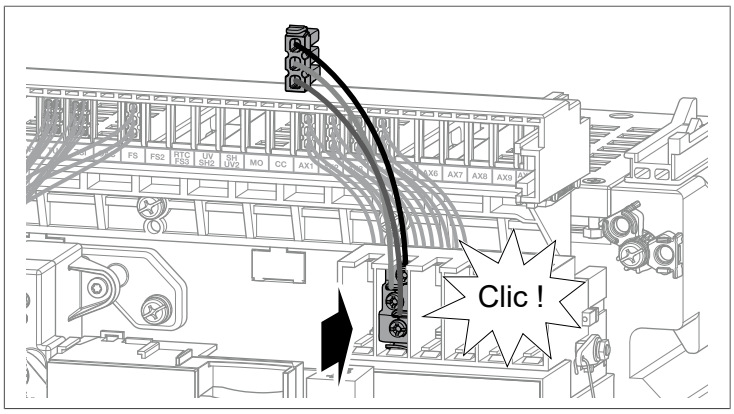
4	Clip the connector of the new AX auxiliary contact onto the terminal block marked AX5 to AX10/vN (HW2) and AX5 to AX12/vN (HW4). On a 3-pole circuit breaker equipped with a sentinel Energy trip device, do not replace the auxiliary contact AX10/vN (HW2) and AX12/vN (HW4) dedicated to the connection to neutral potential.	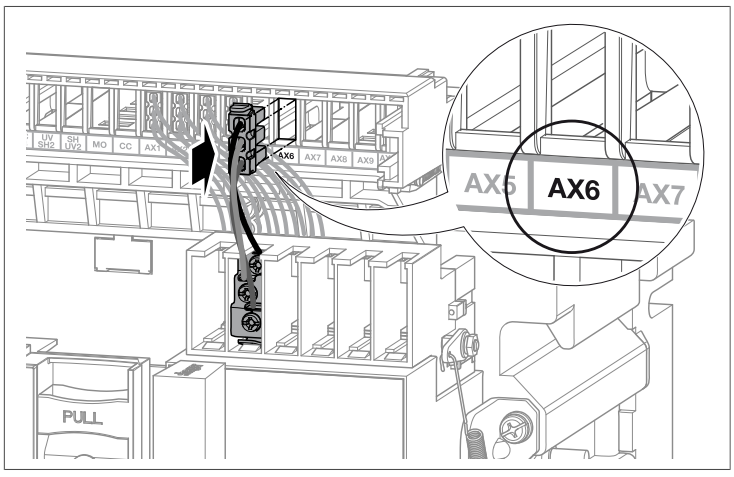

	Action	Illustration
5	Refit the circuit breaker (see Chapter 6.3, Put back in place the drawout circuit breaker or see Chapter 6.6, Reassembling the fixed circuit breaker). When the re-installation steps are complete, the circuit breaker is closed.	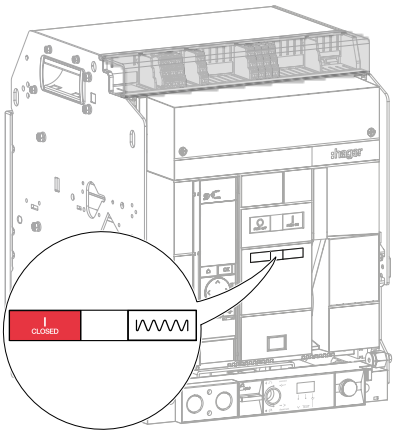
6	If necessary, unclip the protective cover of the terminal blocks.	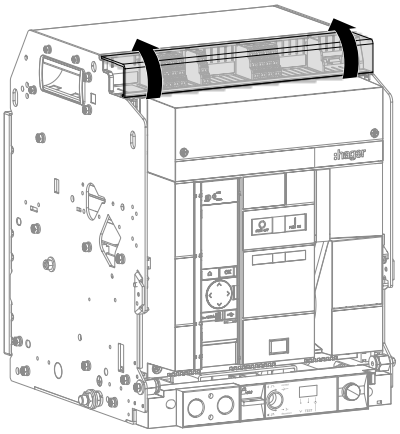
7	Check the AX contacts by referring to the instructions in paragraph **4. Test of the AX auxiliary contacts**	

❷ Replacement of a standard AX auxiliary contact (AX1 to AX4) on a drawout circuit breaker

	Action	Illustration
1	Remove the connector from the AX auxiliary contact to be replaced.	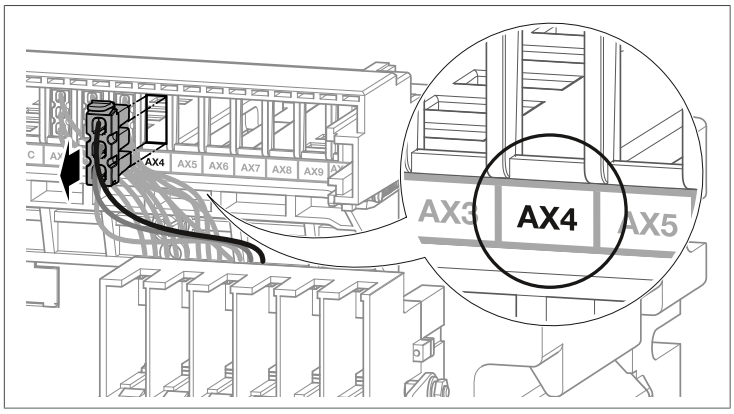
2	Unscrew the 2 screws and remove the connection interface.	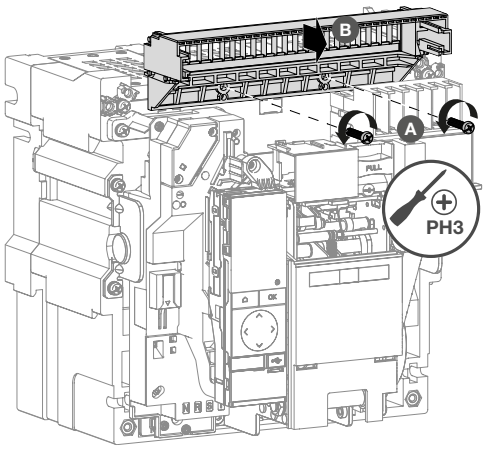
3	Unscrew the screw at the rear of the AX contacts support and remove it using pliers.	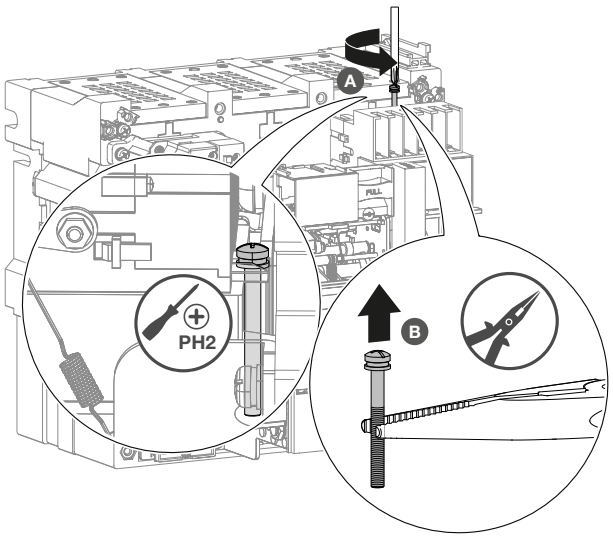

	Action	Illustration
4	Rotate the AX contact support and remove the faulty AX contact by pressing the tab on the contact.	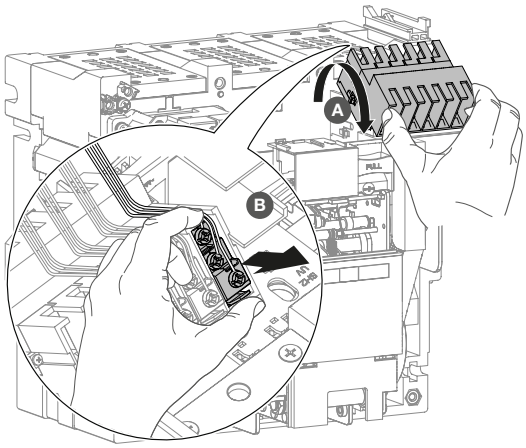
5	Clip on the new AX auxiliary contact then refit the AX contacts support.	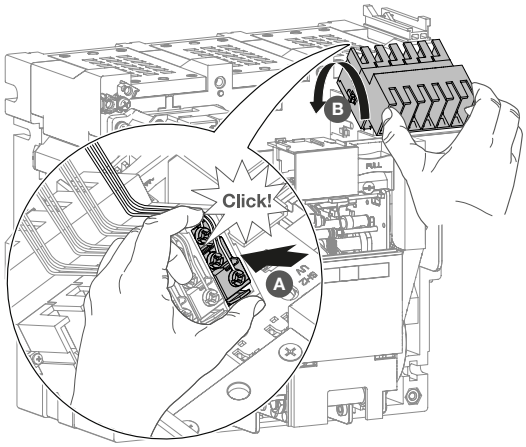
6	Screw on the AX contacts support.	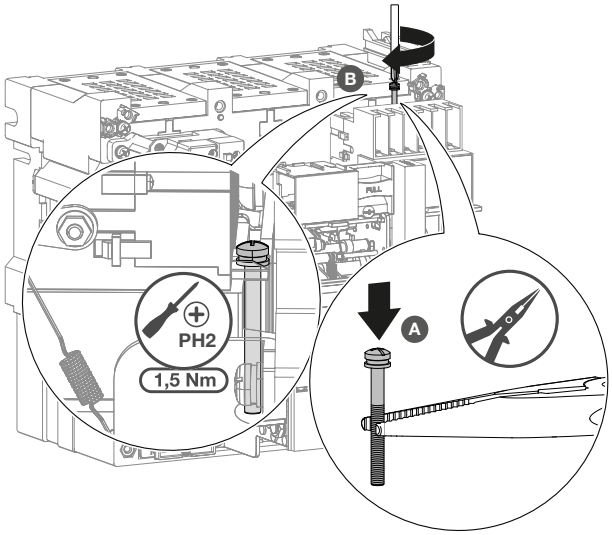

	Action	Illustration
7	Screw in the connection interface **without tightening the screws; it must remain mobile.**	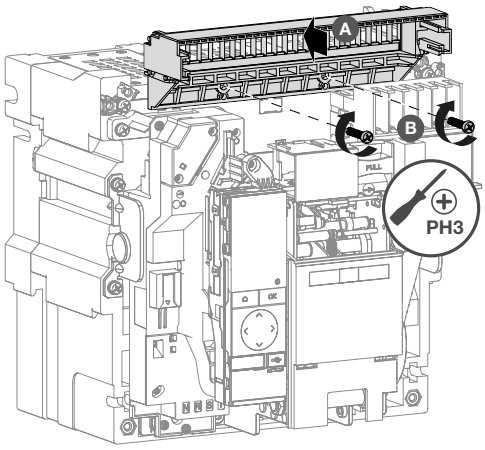
8	Clip the connector of the new AX auxiliary contact onto the terminal block marked AX1 to AX4.	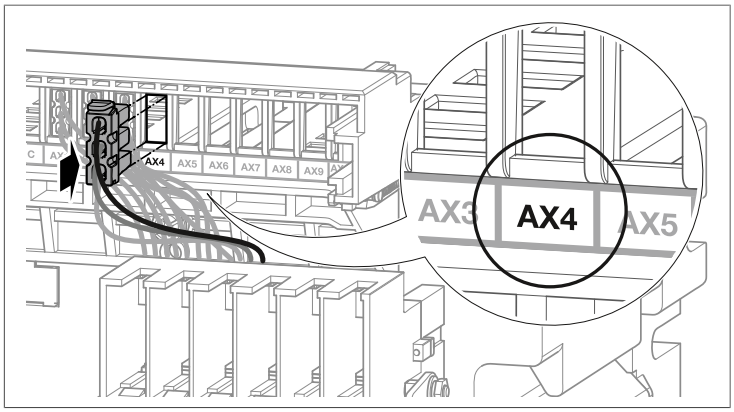
9	Insert the circuit breaker into its chassis, and move it to the Test position. Fully tighten the 2 screws of the connection interface.	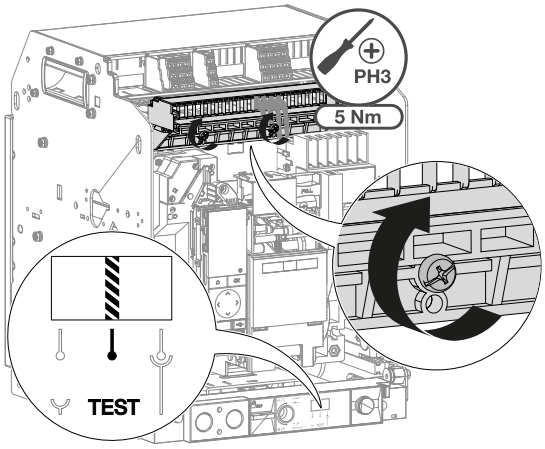
10	Refit the front cover (see Chapter 6.34, Front cover , instructions 7 to 14). When the re-installation steps are complete, the circuit breaker is closed.	

	Action	Illustration
11	If necessary, unclip the protective cover of the terminal blocks.	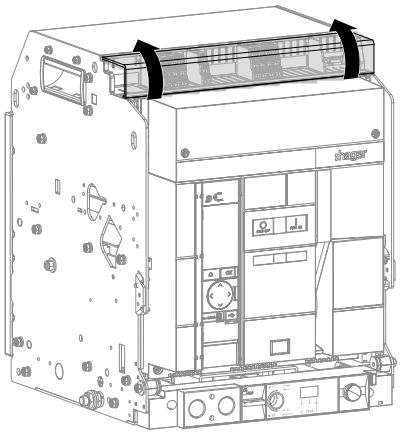
12	Check the AX contacts by referring to the instructions in paragraph **4. Test of the AX auxiliary contacts**	

❸ Replacement of a standard AX auxiliary contact (AX1 to AX4) on a fixed circuit breaker

	Action	Illustration
1	Remove the connector from the AX auxiliary contact to be replaced.	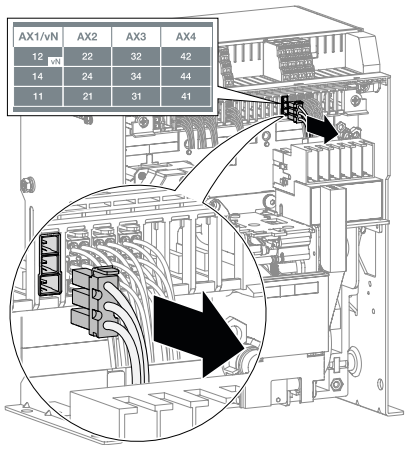
2	Unscrew the 2 screws by a quarter of a turn.	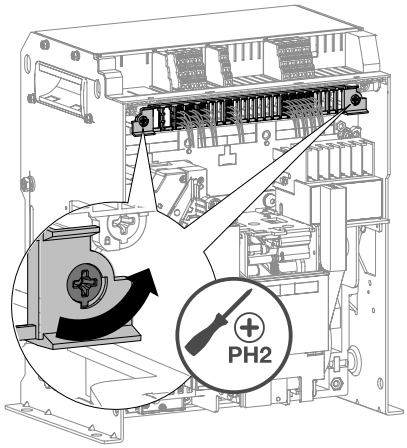
	Remove the terminal strip	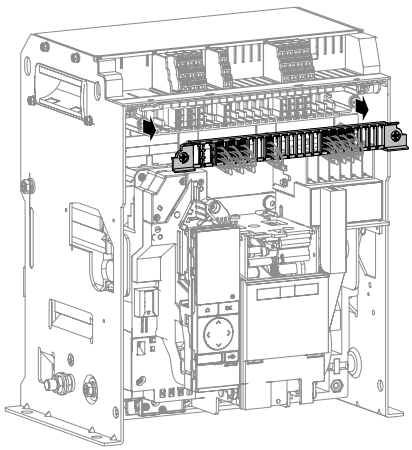

	Action	Illustration
3	Loosen the 4 screws on each side of the circuit breaker.	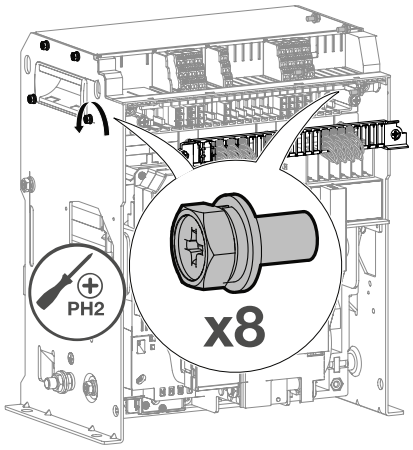
4	Remove the entire arc chamber cover and terminal block support assembly.	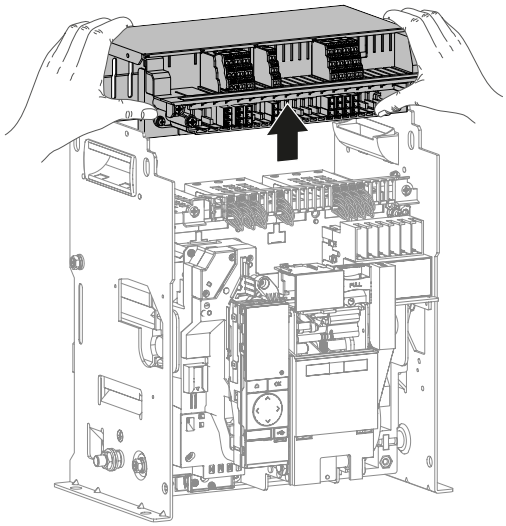
5	Unscrew the screw at the rear of the AX contacts support and remove it using pliers.	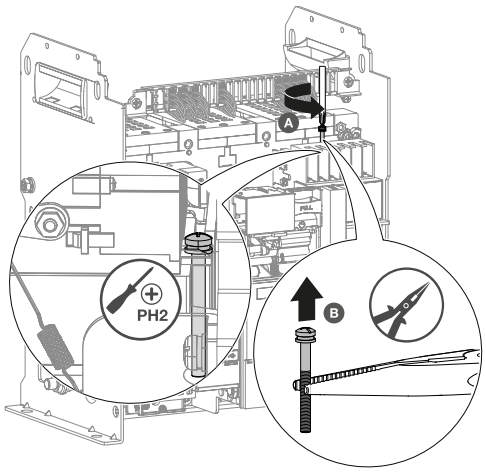

	Action	Illustration
6	Remove the faulty AX auxiliary contact by pressing its tab.	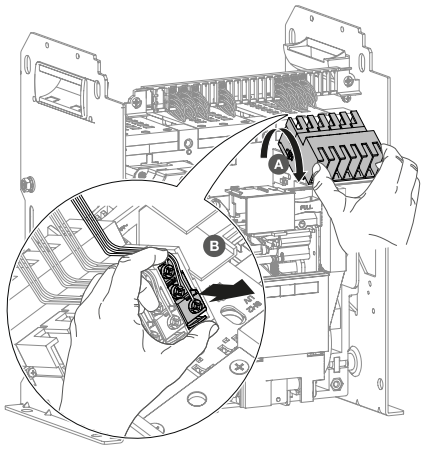
7	Clip on the new AX auxiliary contact then refit the AX contacts support.	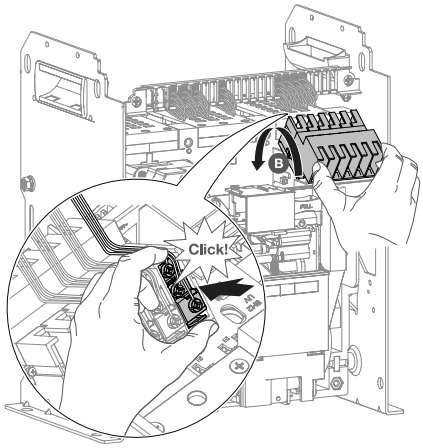
8	Screw on the AX contacts support.	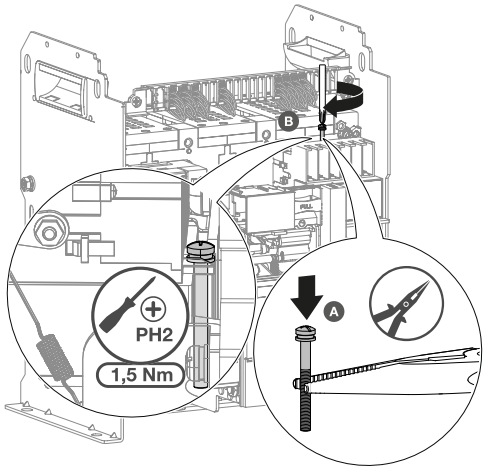

	Action	Illustration
9	Refit the arc chamber cover and terminal block support assembly, then tighten the 4 screws on each side.	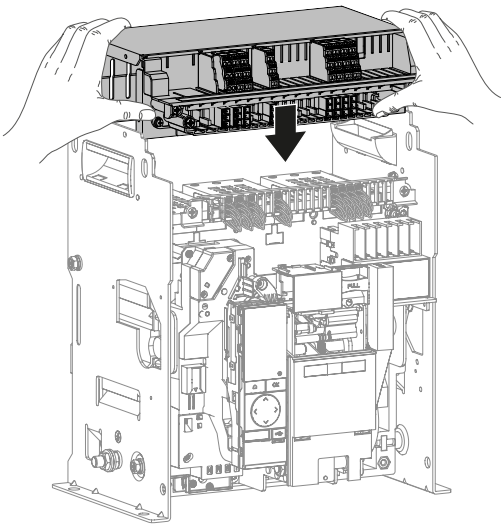 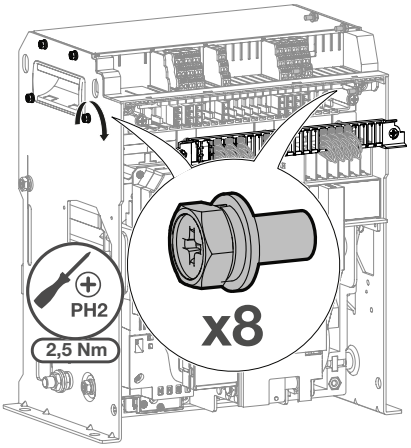
10	Refit the upper terminal strip.	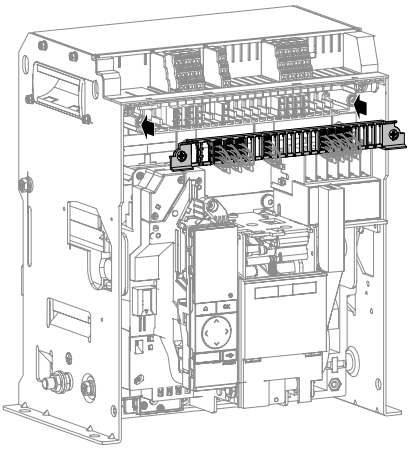

	Action	Illustration
	Turn the 2 screws by a quarter of a turn.	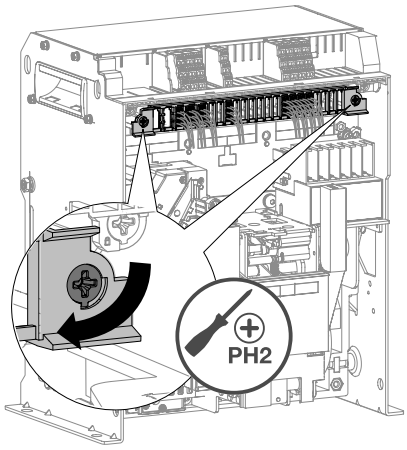
11	Clip the connector of the new AX auxiliary contact onto the terminal block marked AX1 to AX4.	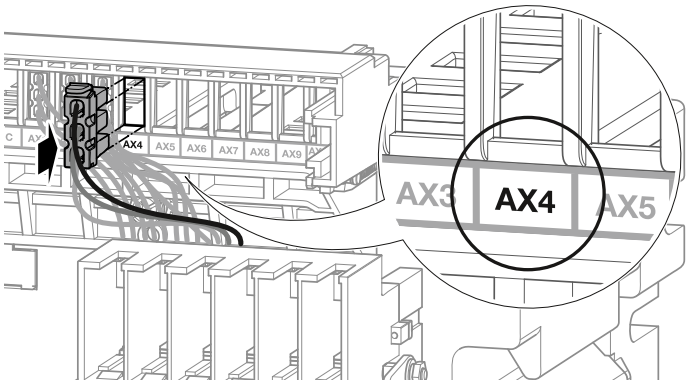
12	Refit the circuit breaker (see Chapter 6.6, Re-assembling the fixed circuit breaker). When the re-installation steps are complete, the circuit breaker is closed.	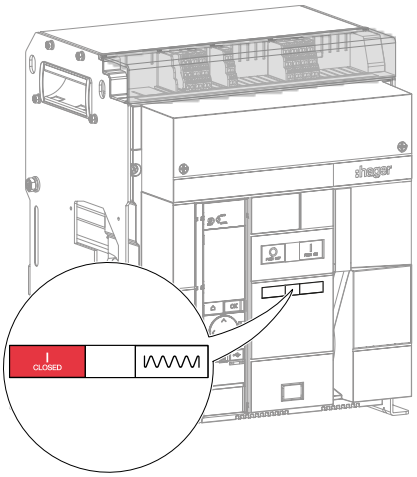

	Action	Illustration
13	If necessary, unclip the protective cover of the terminal blocks.	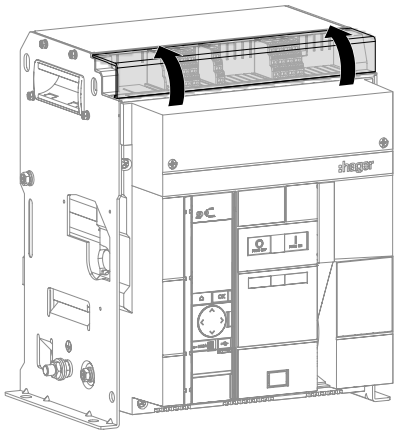
14	Check the AX contacts by referring to the instructions in paragraph **4. Test of the AX auxiliary contacts**	

❹ Test of the AX auxiliary contacts

	Action	Illustration
1	With the circuit breaker closed, use an ohmmeter to verify the state of the AX auxiliary contacts marked AX1 to AX10/vN (HW2) and AX1 to AX12/vN (HW4). Test the continuity between the terminals: **xx**1 and **xx**4 **xx** from 01 to 10 (HW2) **xx** from 01 to 12 (HW4) and the non-continuity between the terminals: **xx**1 and **xx**2 **xx** from 01 to 10 (HW2) **xx** from 01 to 12 (HW4) On a 3-pole circuit breaker equipped with a sentinel Energy trip unit, perform tests only on the auxiliary contacts **AX1** to **AX9** (HW2) and **AX1** to **AX11** (HW4).	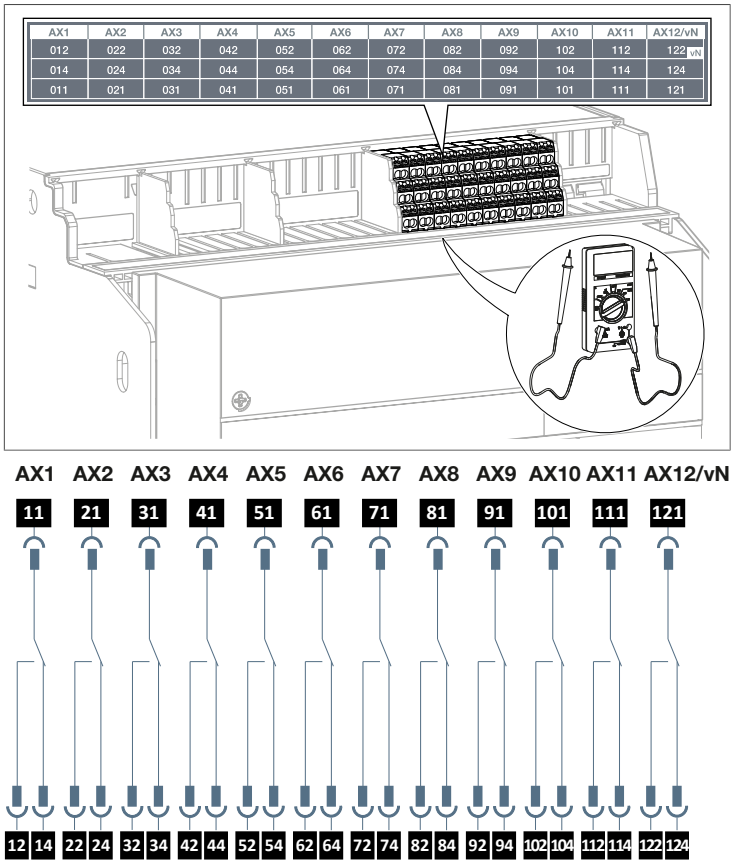
2	Open the circuit breaker by pressing the opening push button .	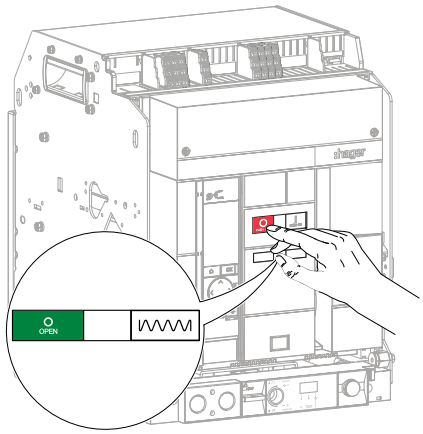

	Action	Illustration
3	With the circuit breaker open, use an ohmmeter to verify the state of the AX auxiliary contacts marked AX1 to AX10/vN (HW2) and AX1 to AX12/vN (HW4). Test the continuity between the terminals: **xx**1 and **xx**2 **xx** from 01 to 10 (HW2) **xx** from 01 to 12 (HW4) and the non-continuity between the terminals: **xx**1 and **xx**4 **xx** from 01 to 10 (HW2) **xx** from 01 to 12 (HW4) On a 3-pole circuit breaker equipped with a sentinel Energy trip device, perform tests only on the auxiliary contacts **AX1** to **AX9** (HW2) and **AX1** to **AX11** (HW4).	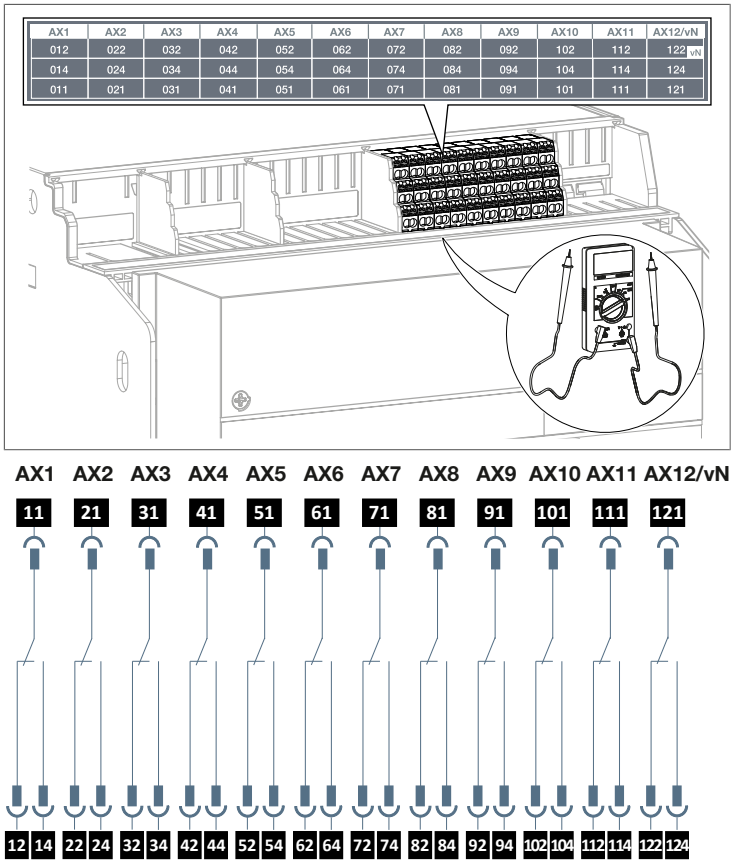
4	Put the protection cover back on the terminal block.	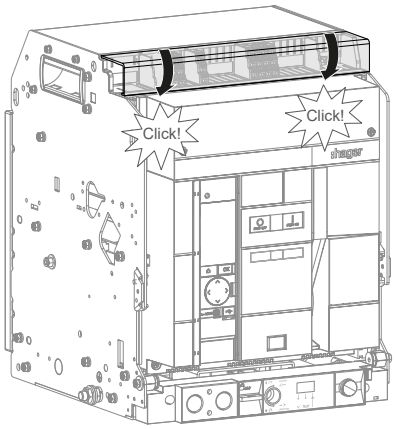

6.13 FS Fault trip contact

For the installation of an additional FS trip fault contact

Follow the installation instructions described in manual 6LE009028A, which is supplied with the product, then install a TB terminal block connection as described in manual 6LE009031A. Then proceed to instructions 7 to 15 below.

For the replacement of an FS, FS2 and FS3 trip fault contact

Remove the circuit breaker first (see Chapter 6.1, Removal of the drawout circuit breaker or see Chapter 6.4, Disassembling the fixed circuit breaker) then follow the instructions below:

1. **The circuit breaker is equipped with 3 trip fault contacts and the FS (standard) contact is damaged.**

The FS contact (standard) is not removable and cannot be changed.

WHAT TO DO

If the 3 FS, FS2, FS3 contacts are installed and used

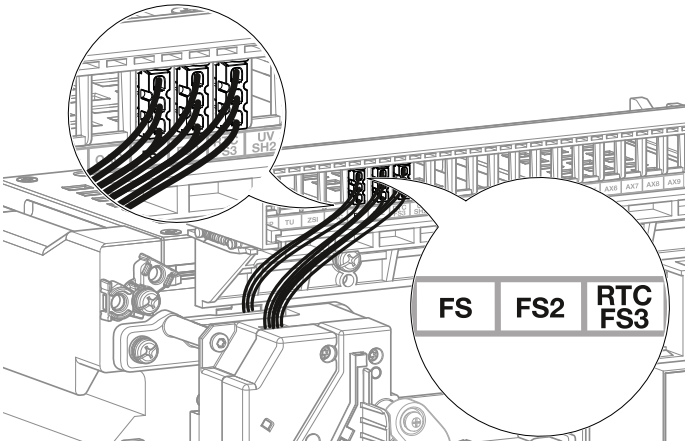

- relay contact FS2 or FS3 by making the following wiring.

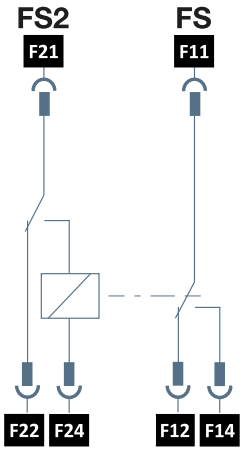

- Replace the circuit breaker.

❷ The circuit breaker is equipped with 1 or 2 trip fault contacts and the FS (standard) contact is damaged.

The FS contact (standard) is not removable and cannot be changed.

If the FS contact is installed alone or with a second trip fault contact, you must install an FS2 or FS3 contact as a replacement for the FS (standard) contact.

To do this, follow these steps:

	Action	Illustration
1	Remove the connector from the **FS** contact and cut its wiring as close as possible to the trip unit.	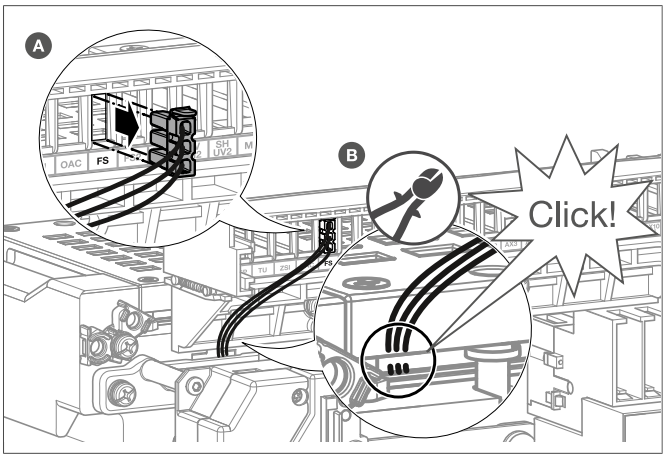
2	Unscrew and remove the trip fault contacts holder.	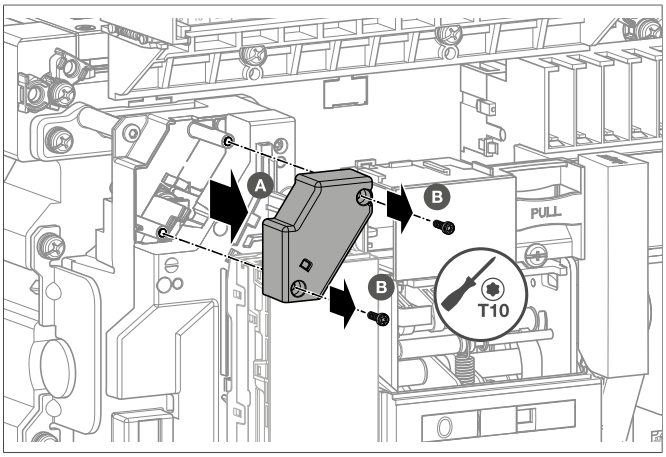
3	Install an FS2 or FS3 trip fault contact.	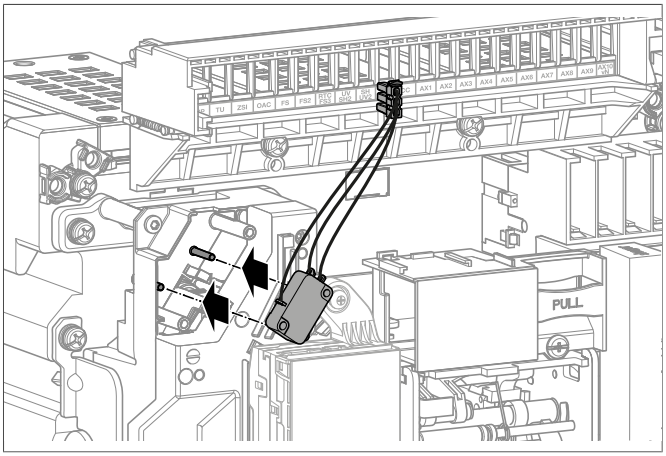

	Action	Illustration
4	Screw on the support.	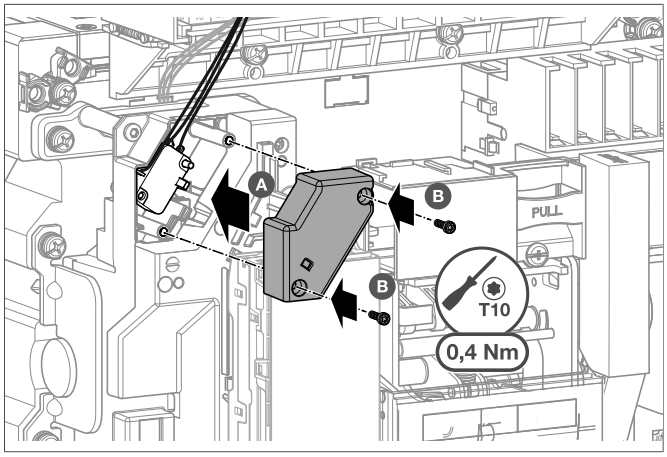
5	Connect the connector of the contact to the terminal **FS**.	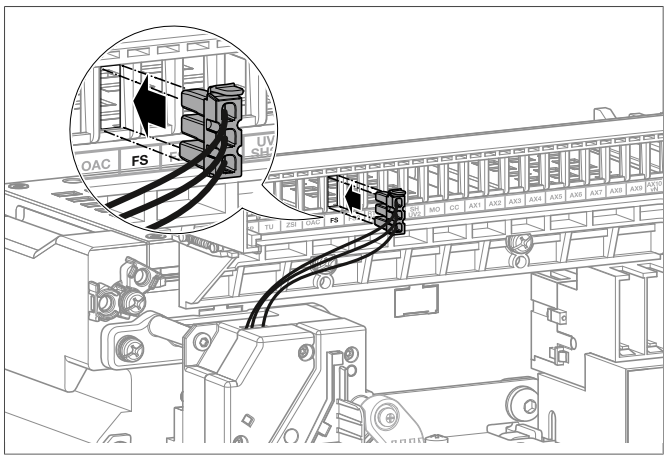

❸ Replacement of the FS2 or FS3 trip fault contacts.

	Action	Illustration
1	Remove the connector from the FS2 or FS3 trip fault contact to be replaced.	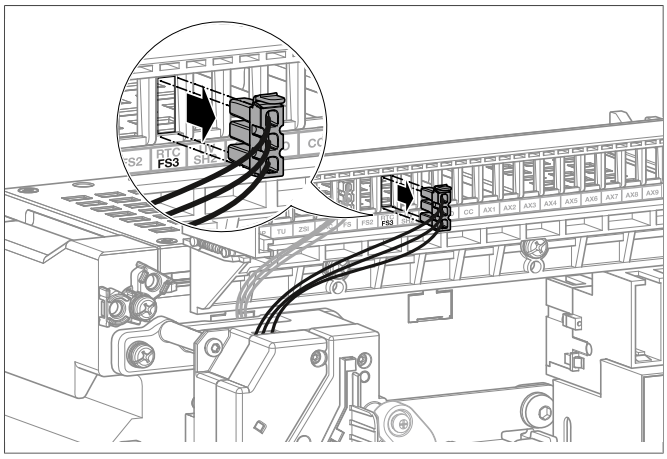
2	Unscrew and remove the trip fault contact support.	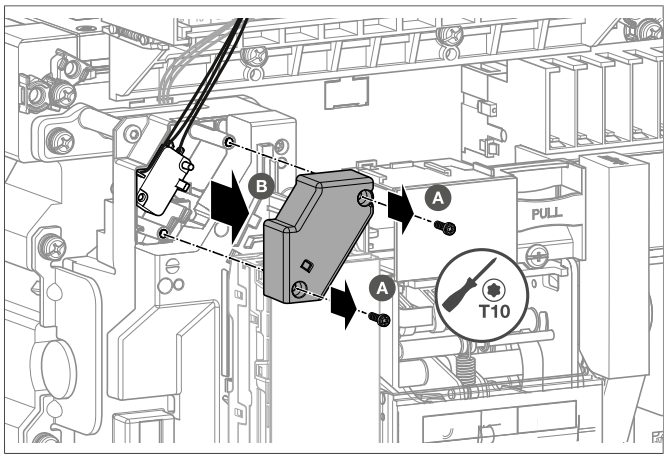
3	Remove the FS2 or FS3 trip fault contact from its support...	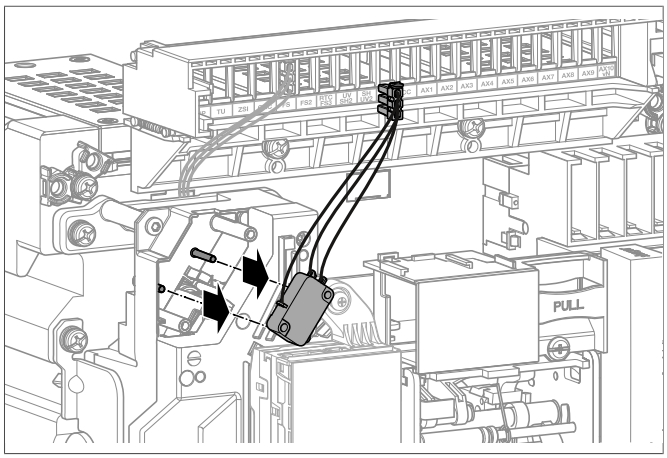

	Action	Illustration
3	*(continued)* then replace it with a new one.	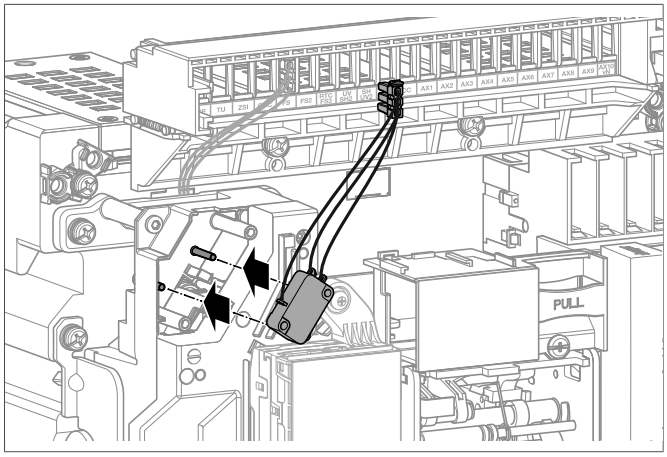
4	Refit the trip fault contact support.	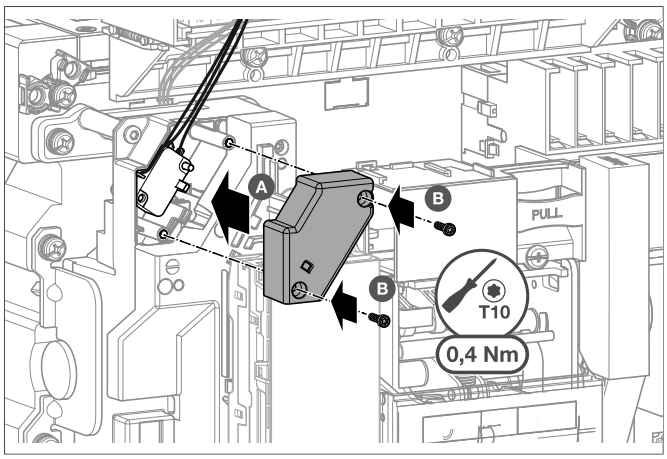
5	Clip the connector of the new FS2 or FS3 trip fault contact onto the terminal block marked FS2 or FS3.	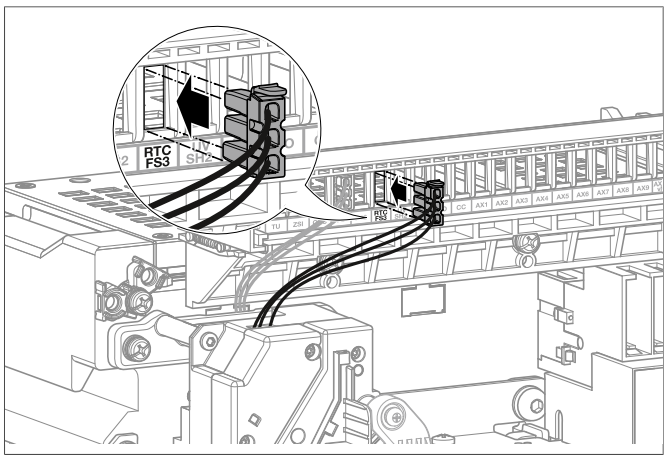

	Action	Illustration
6	Refit the circuit breaker (see Chapter 6.3, Put back in place the drawout circuit breaker or see Chapter 6.6, Reassembling the fixed circuit breaker). When the re-installation steps are complete, the circuit breaker is closed.	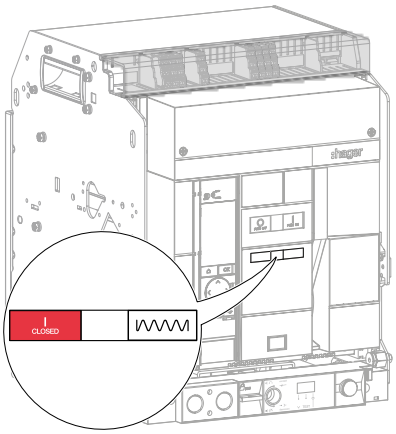
7	If necessary, unclip the protection cover from the terminal blocks.	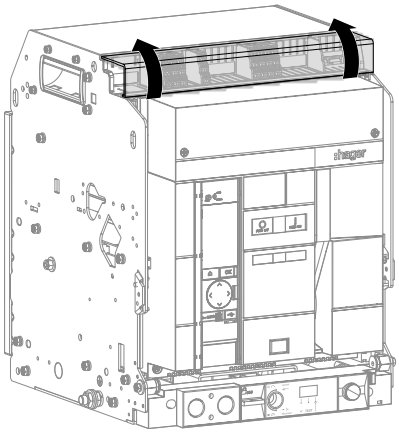
8	Connect a PC that is equipped with software **Hager Power setup** to the USB-C socket of the trip unit.	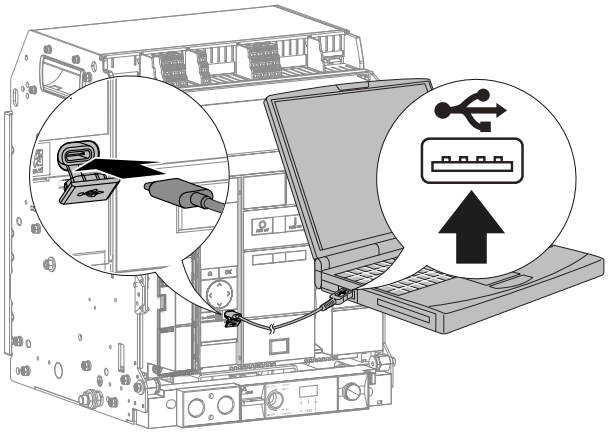

	Action	Illustration
9	Go to the test menu of the software **Hager Power set-up** and initiate an electromechanical trip command.	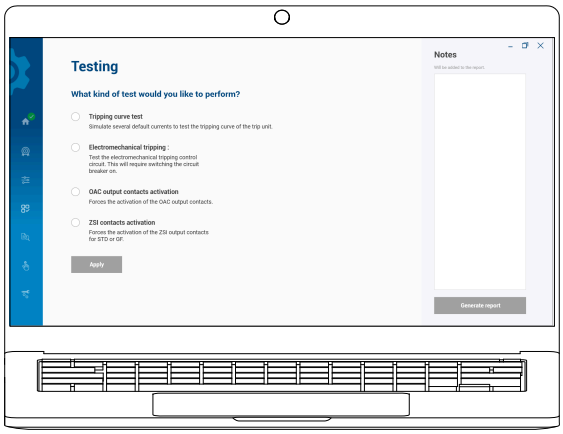
10	First disconnect the cables connected to the FS, FS2 and FS3 terminals then use an ohmmeter to check the continuity between the terminals: • F11 and F12 • F21 and F22 • F31 and F32 and the non-continuity between the terminals: • F11 and F14 • F21 and F24 • F31 and F34	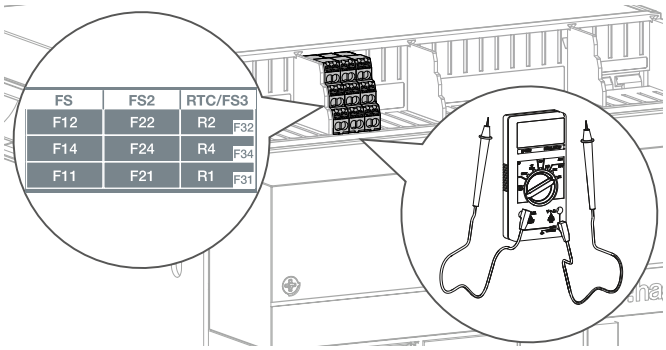 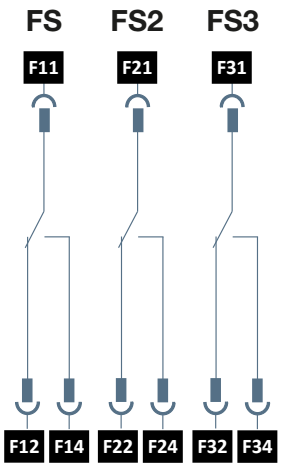

	Action	Illustration
11	Acknowledge the ‘TEST’ trip message on the trip unit by briefly pressing the button →OK or the button OK. The ‘TEST’ trip message stops flashing and becomes stable. Press the button →OK on the sentinel trip unit or OK on the sentinel Energy trip unit for more than 3 seconds; the display goes out.	sentinel trip unit 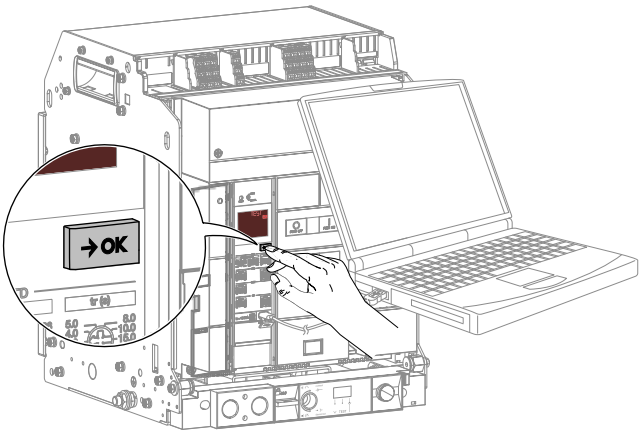 sentinel Energy trip unit 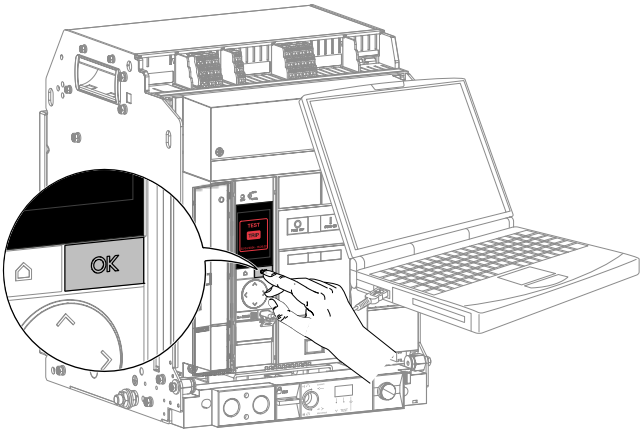
12	Verify that the circuit breaker has tripped, and if it is not in Auto Reset mode, press the RESET button.	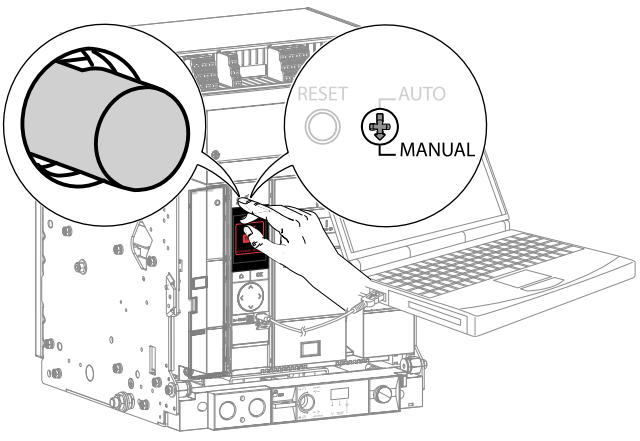

	Action	Illustration
13	Use an ohmmeter to verify the continuity between the terminals: • F11 and F14 • F21 and F24 • F31 and F34 and the non-continuity between the terminals: • F11 and F12 • F21 and F22 • F31 and F32	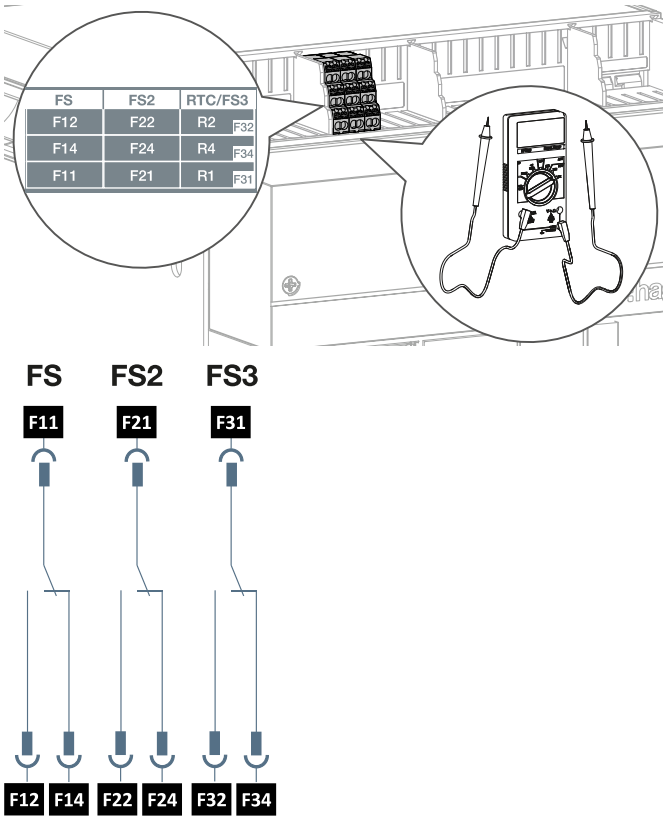
14	Remove the PC equipped with the software **Hager Power setup** from the USB-C socket of the trip unit.	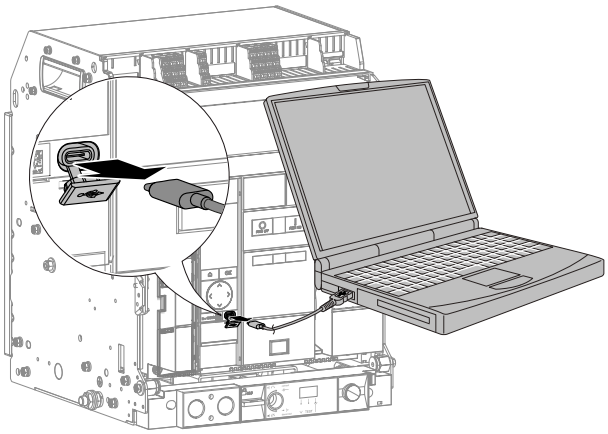
15	Reconnect the cables originally connected to the FS, FS2 and FS3 terminal blocks and, if necessary, replace the protective cover of the terminal blocks.	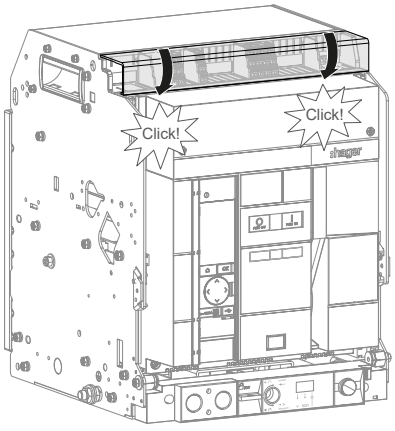

6.14 SH shunt trip coil

For the installation of an SH shunt trip coil
follow the installation instructions described in the manual 6LE009029A supplied with the product and then install a TB connection terminal block as described in manual 6LE009031A.
Then proceed with instructions 8 to 24 below.

To replace an SH shunt trip coil
Remove the circuit breaker beforehand (see Chapter 6.1, Removal of the drawout circuit breaker or see Chapter 6.4, Disassembling the fixed circuit breaker) then follow the instructions below:

	Action	Illustration
1	Remove the connector from the SH shunt trip coil to be replaced.	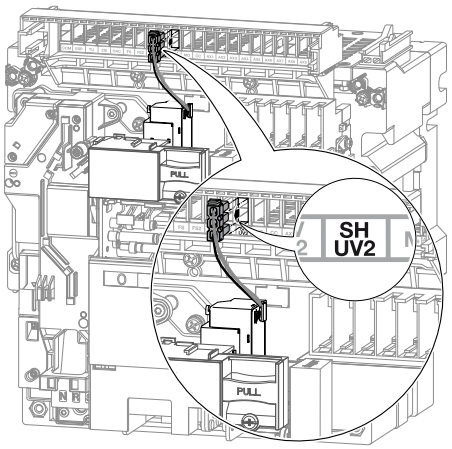
2	Press the SH shunt trip coil and pull out the Push-Lock system.	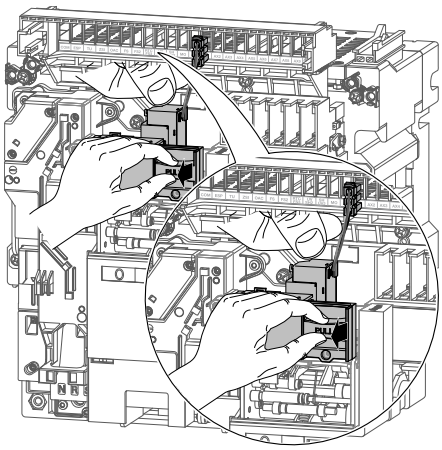

	Action	Illustration
3	Remove the defective SH shunt trip coil.	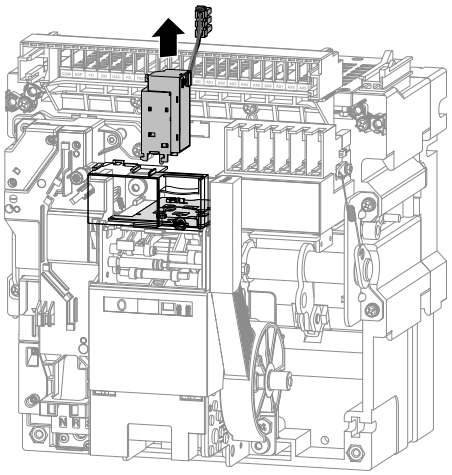
4	Then replace it with a new one.	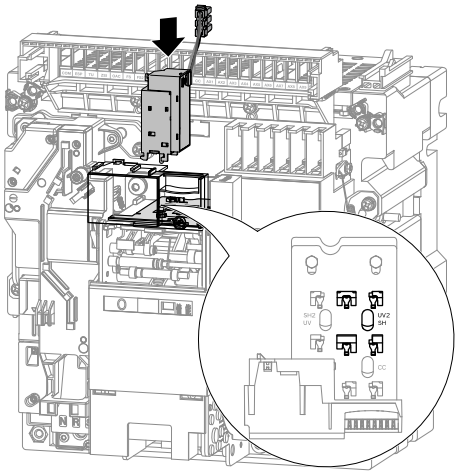
5	Press the SH shunt trip coil and push the Push-Lock system back.	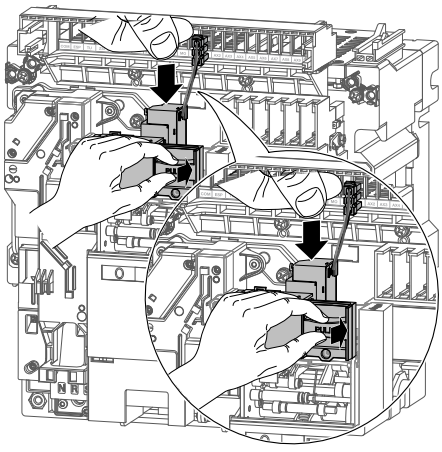

	Action	Illustration
6	Clip the connector of the new SH shunt trip coil onto the terminal block which is marked SH/UV2 or UV/SH2.	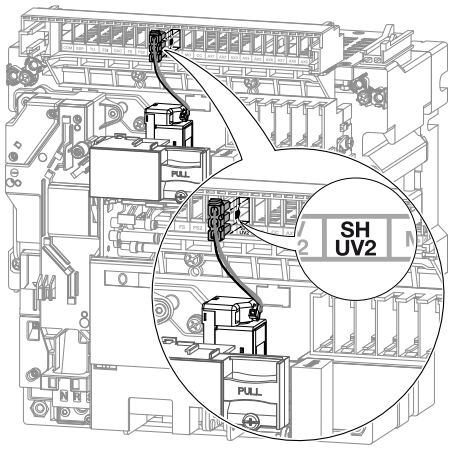
7	Refit the circuit breaker (see Chapter 6.3, Put back in place the drawout circuit breaker or see Chapter 6.6, Reassembling the fixed circuit breaker). When the re-installation steps are complete, the circuit breaker is closed.	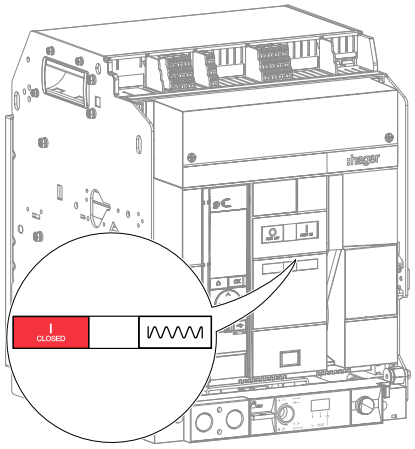
8	If necessary, unclip the protection cover from the terminal blocks.	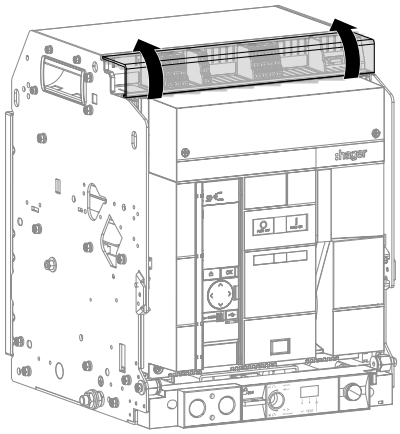

	Action	Illustration
9	Connect an external variable power supply to the terminal blocks that are marked UV/SH2 or SH/UV2 and supply power to the SH shunt trip coil at 85 % of Vn min (for example for a 200-250 V coil,Vn min = 200 V).	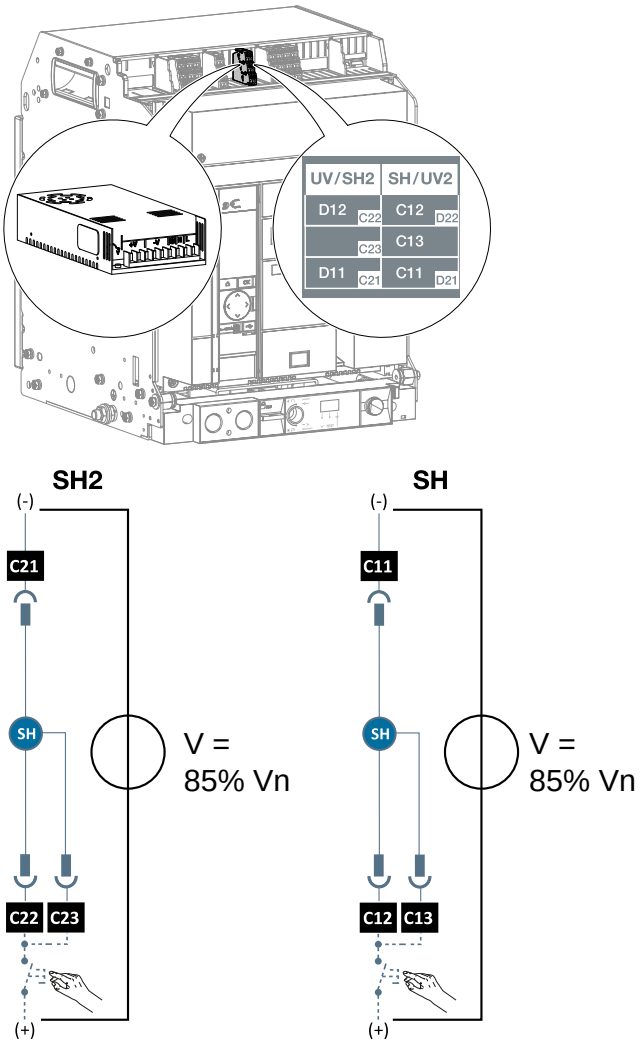
10	Check that the circuit breaker opens.	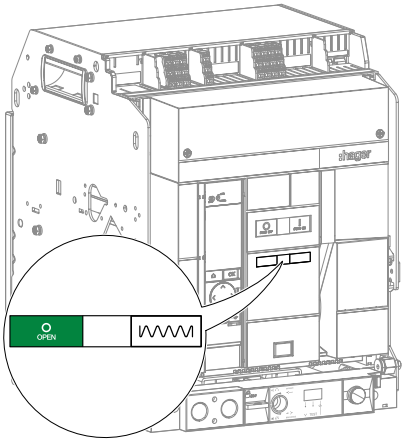

	Action	Illustration
11	Charge the closing spring using the charging handle until the following indicators appear.	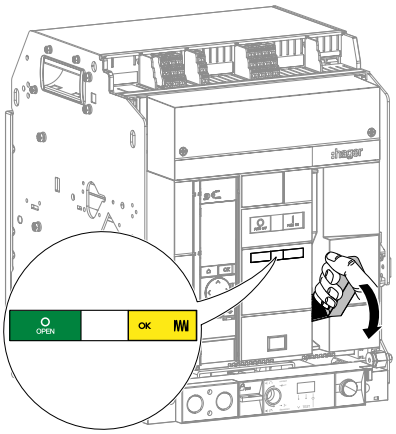
12	Check that it is not possible to close the circuit breaker by pressing the closing push button .	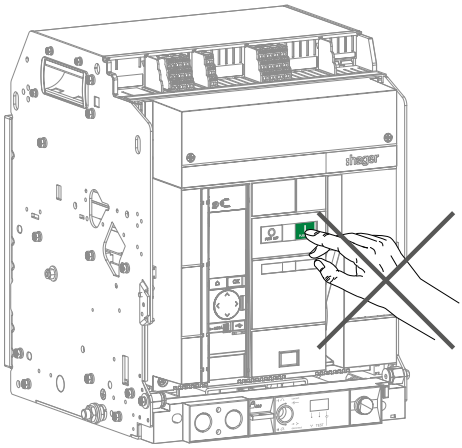
13	Set the variable external power supply of the SH shunt trip coil to 0 V.	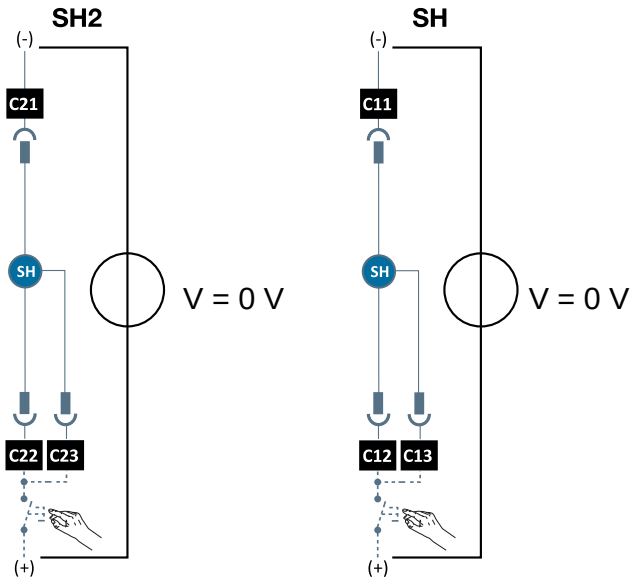

	Action	Illustration
14	Check that it is now possible to close the circuit breaker by pressing the closing push button .	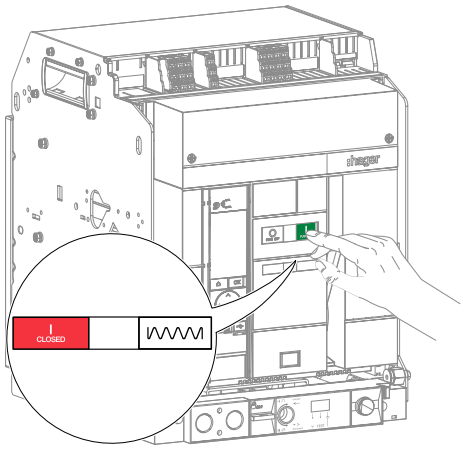
15	Supply the SH shunt trip coil at 110% of Vn min (for example for a 200-250 V coil, Vn min = 250 V) and check that the circuit breaker opens.	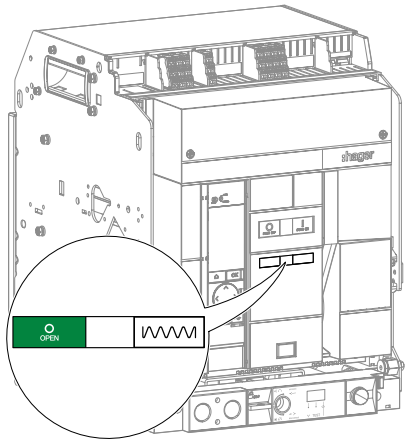
16	Charge the closing spring using the charging handle until the following indicators appear.	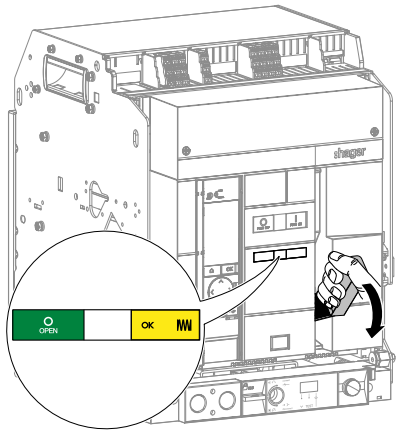

	Action	Illustration
17	Check that it is not possible to close the circuit breaker by pressing the closing push button I.	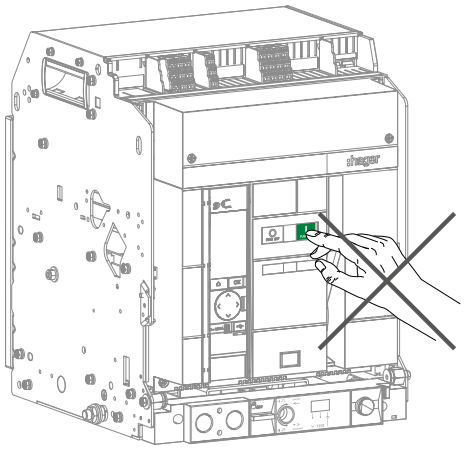
18	Set the variable external power supply of the SH shunt trip coil to 0 V.	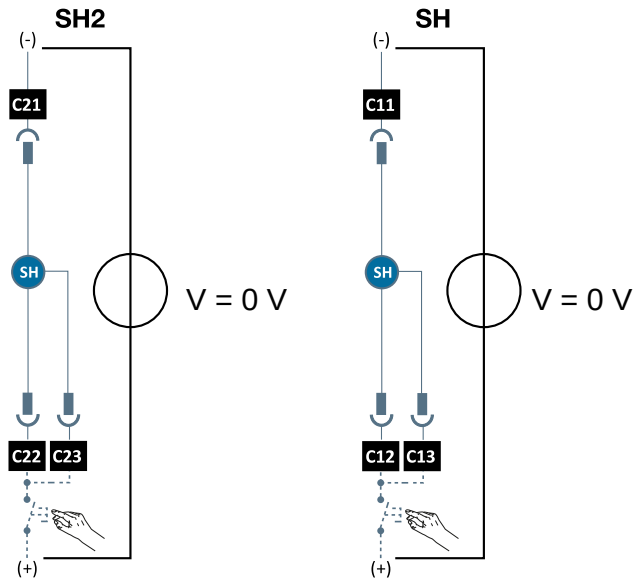
19	Check that it is now possible to close the circuit breaker by pressing the closing push button I.	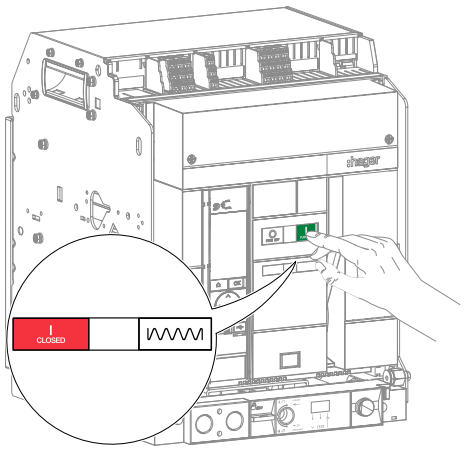

	Action	Illustration
20	Power the SH shunt trip coil at Vn and check that the circuit breaker opens.	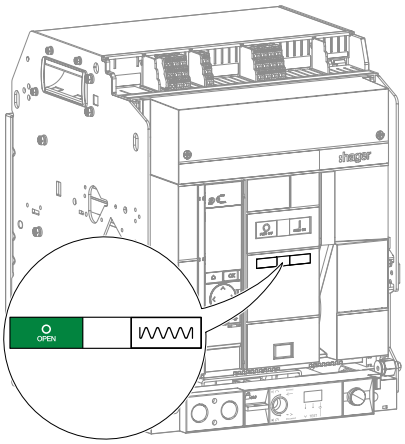
21	Charge the closing spring using the charging handle until the following indicators appear.	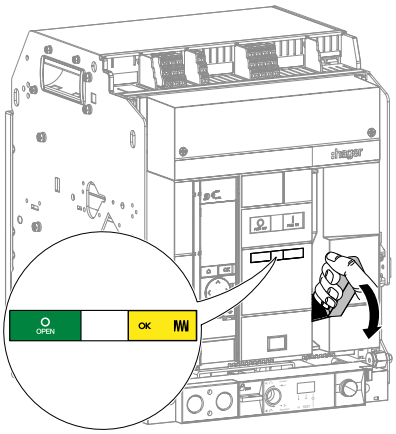
22	Supply the SH shunt trip coil at 20% of Vn max.	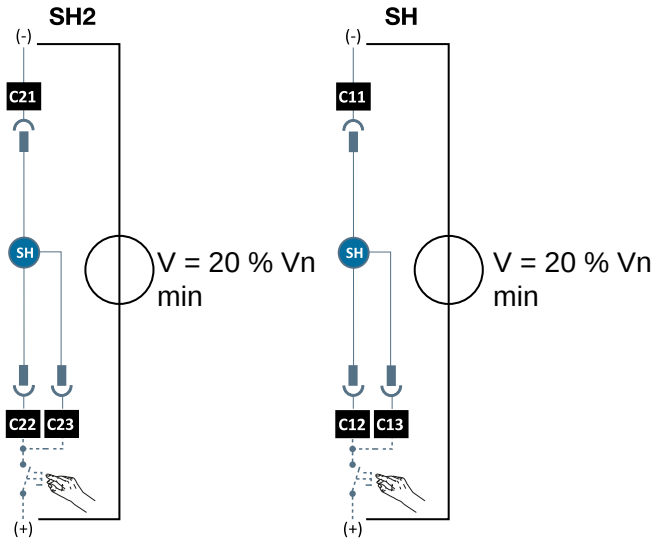

	Action	Illustration
23	Check that it is now possible to close the circuit breaker by pressing the closing push button .	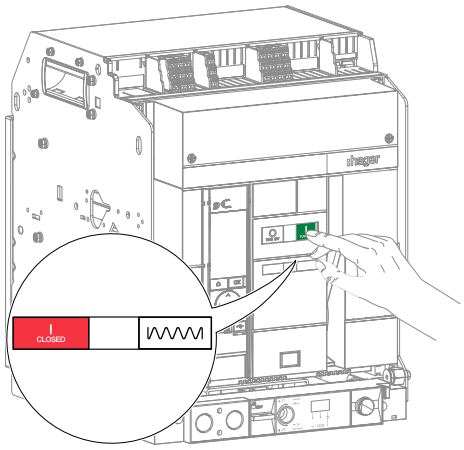
24	If necessary, put the protection cover back on the terminal block.	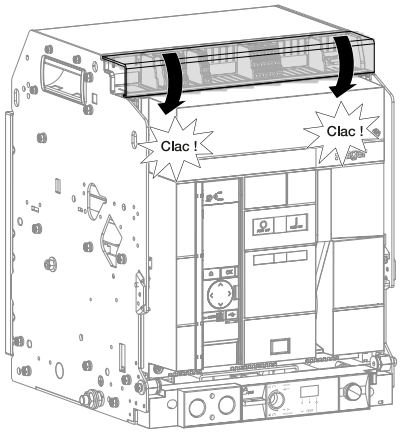

WHAT TO DO

In the event of a malfunction, refer to the Troubleshooting Guide 6LE009769A.

6.15 UV undervoltage release coil

For installation of a UV undervoltage release coil
follow the installation instructions described in manual 6LE009029A, which is supplied with the product, and then install a TB connection terminal block as described in manual 6LE009031A. Then proceed to instructions 8 to 17 below.

To replace a UV undervoltage release coil
remove the circuit breaker beforehand (see Chapter 6.1, Removal of the drawout circuit breaker or see Chapter 6.4, Disassembling the fixed circuit breaker) then follow the instructions below:

	Action	Illustration
1	Remove the connector of the defective UV undervoltage coil to be replaced.	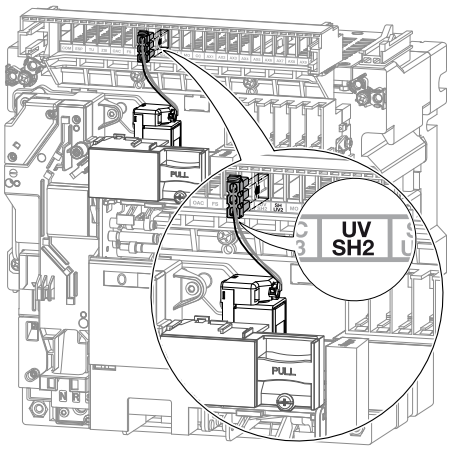
2	Press the UV undervoltage coil then pull the Push-Lock system.	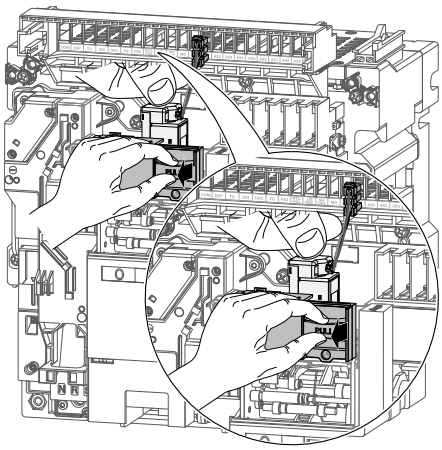

	Action	Illustration
3	Remove the defective UV undervoltage coil.	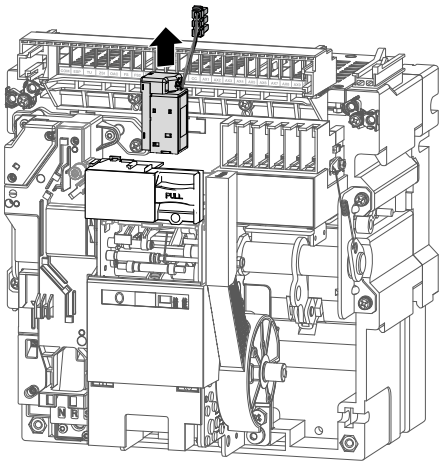
4	Then replace it with a new one.	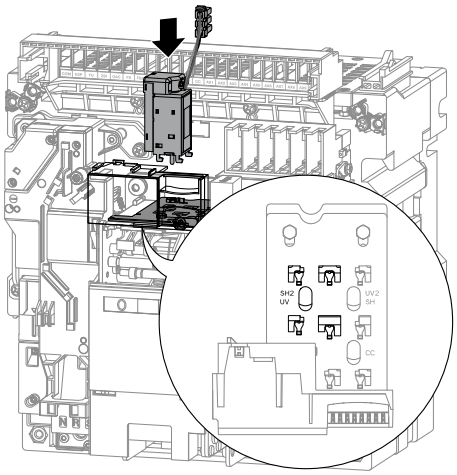
5	Press the UV undervoltage coil then push the Push-Lock system back.	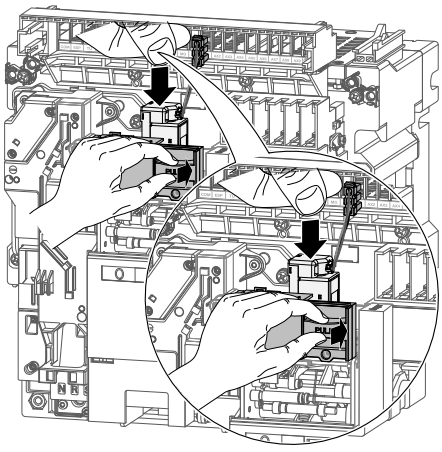

	Action	Illustration
6	Clip the connector of the new UV undervoltage coil onto the terminal block marked SH/UV2 or UV/SH2.	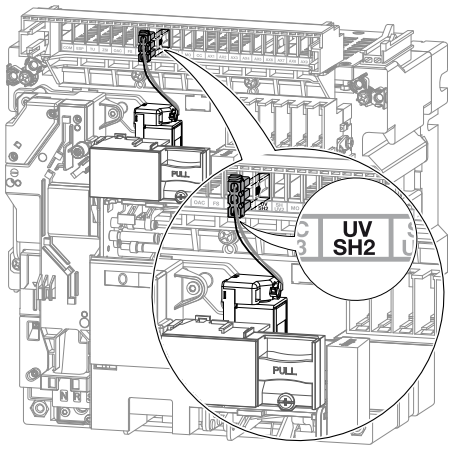
7	Refit the circuit breaker (see Chapter 6.3, Put back in place the drawout circuit breaker or see Chapter 6.6, Reassembling the fixed circuit breaker). When the re-installation steps are complete, the circuit breaker is closed. If the UV undervoltage coil is not powered, the circuit breaker cannot be closed.	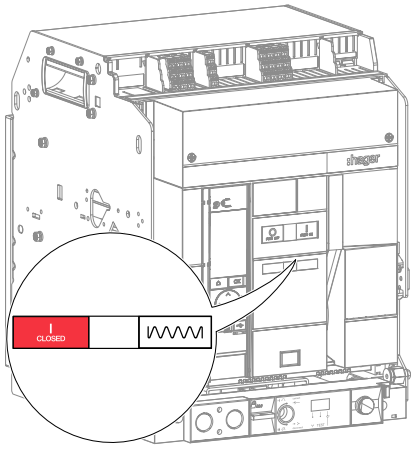
8	If necessary, unclip the protection cover from the terminal blocks.	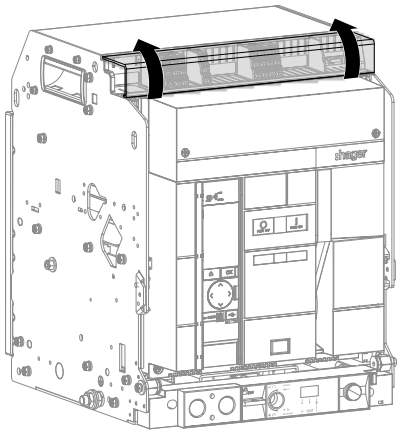

	Action	Illustration
9	Connect an external variable power supply to the terminal block marked UV/SH2 or SH/UV2, and supply the UV undervoltage coil at 85 % of Vn min (for example for a 380-480 V coil, Vn min = 380 V).	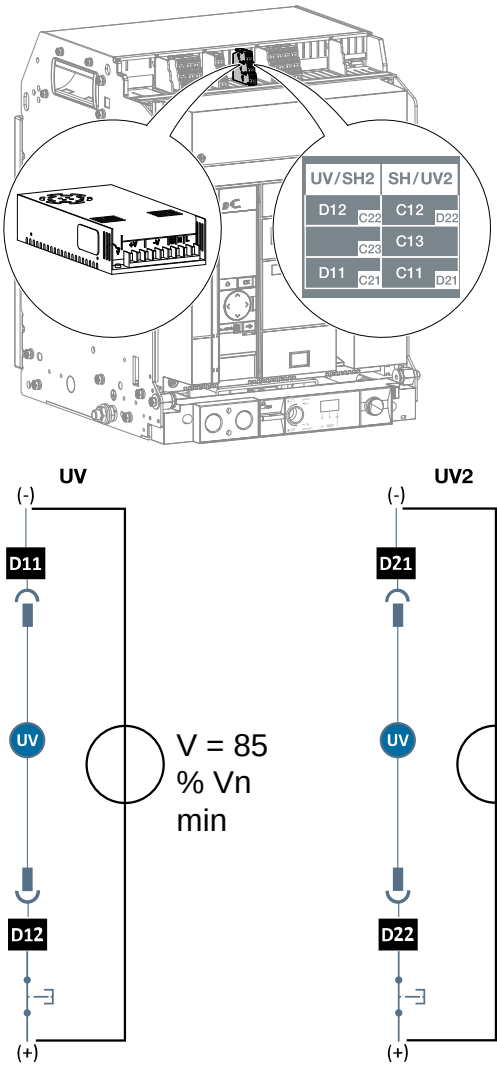
10	Reduce the supply voltage of the UV undervoltage coil to 20% of Vn max.	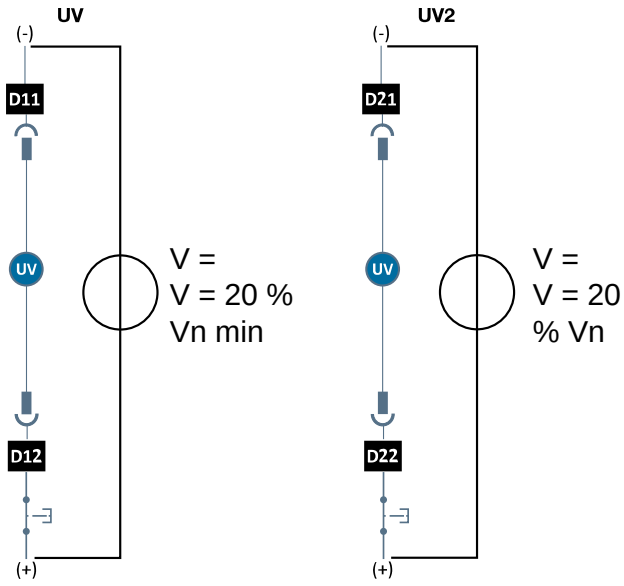

	Action	Illustration
11	Check that the circuit breaker opens between 70 and 20% of Vn max.	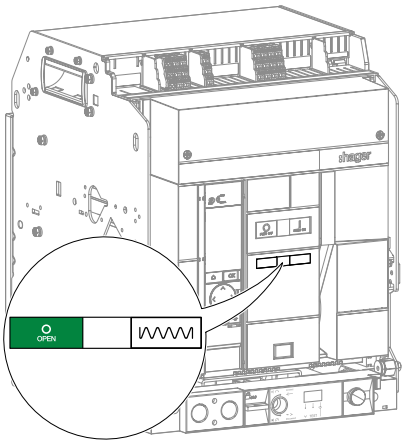
12	Supply the UV undervoltage coil at 110% of Vn.	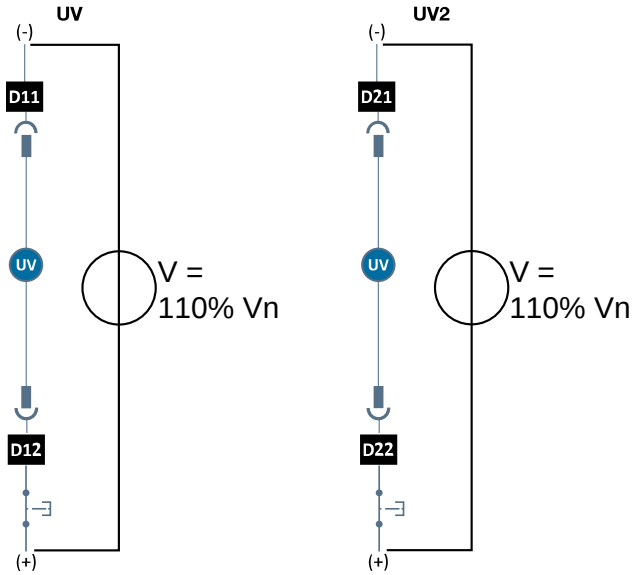
13	Charge the closing spring using the charging handle until the following indicators appear.	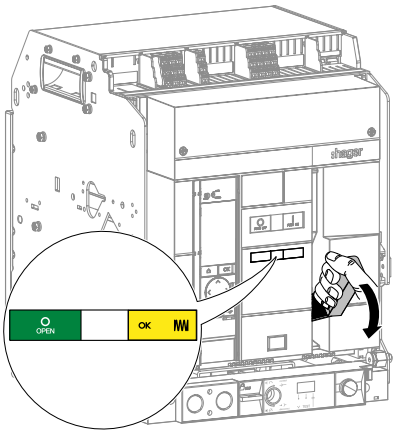

	Action	Illustration
14	Close the circuit breaker by pressing the closing push button .	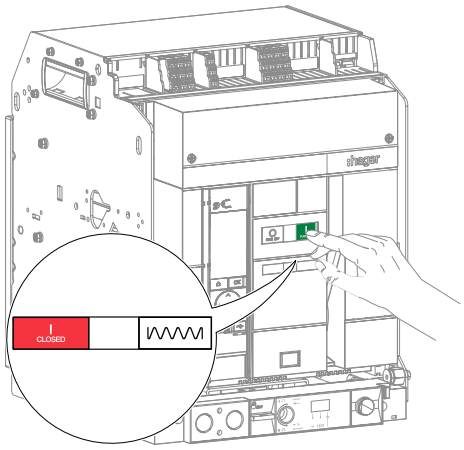
15	Reduce the supply voltage of the UV undervoltage coil to 20% of Vn max.	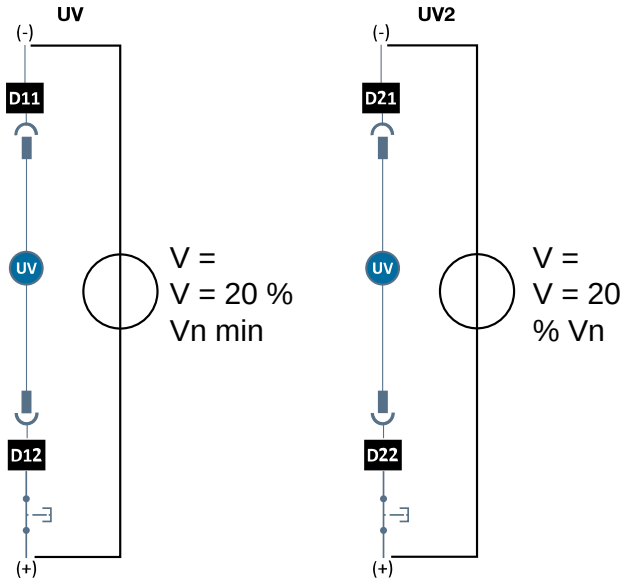
16	Check that the circuit breaker opens between 70 and 20% of Vn max.	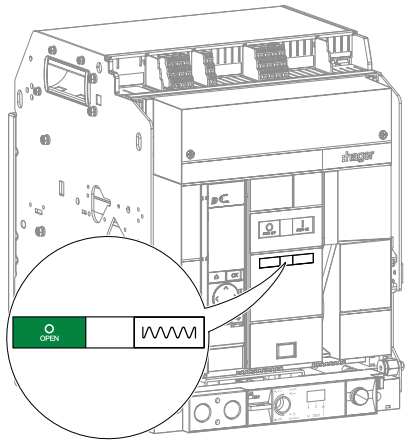

	Action	Illustration
17	If necessary, put the protection cover back on the terminal block.	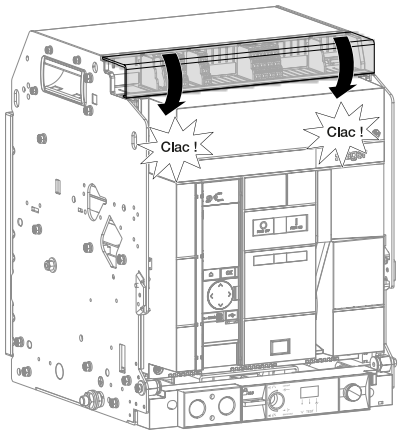

WHAT TO DO

In the event of a malfunction, refer to the Troubleshooting Guide 6LE009769A.

6.16 UVTC Undervoltage Time Delay Controller

For the installation of a UVTC undervoltage coil time delay controller

Follow the installation instructions described in manual 6LE007626A, which is supplied with the product, then install a TB terminal block connection as described in manual 6LE009031A.
Then proceed to instructions 6 to 10 below.

For the replacement of a UVTC undervoltage coil time delay controller

Follow the instructions below:

	Action	Illustration
1	If necessary, unclip the protection cover from the terminal blocks.	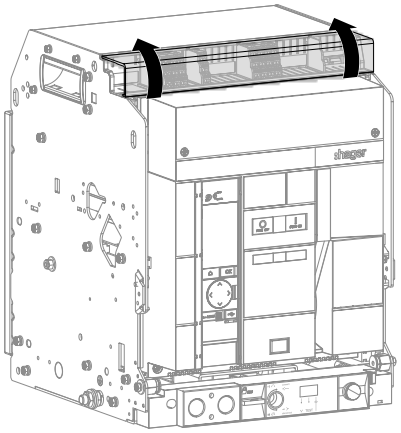
2	❶ Disconnect the 2 wires at the circuit breaker terminal block, ❷ Cut off the supply of the time controller for the UVTC undervoltage release coil to be replaced, ❸ Disconnect its 2 power wires.	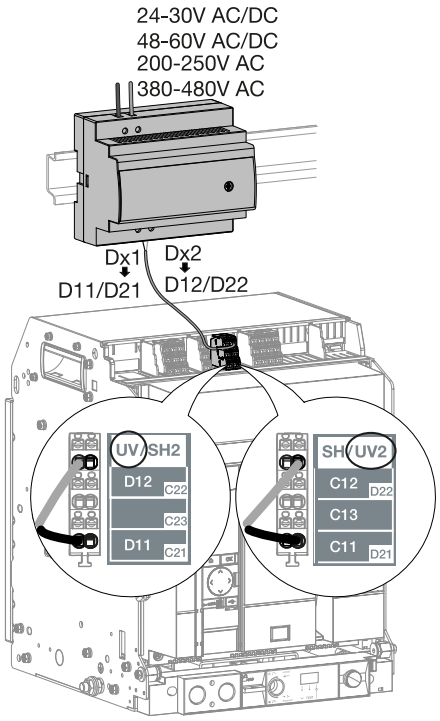

	Action	Illustration
3	Insert a small 5 mm flat screwdriver into the notch, pull down... then remove the time controller for the UVTC undervoltage release coil from the mounting rail.	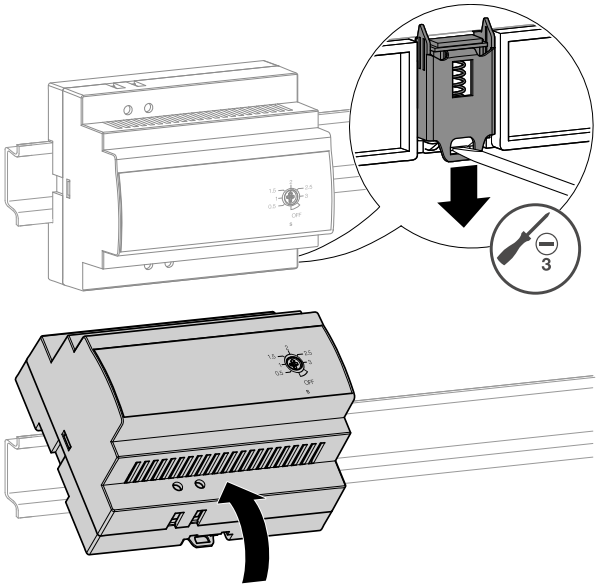
4	Clip a new UVTC undervoltage time delay controller onto the mounting rail.	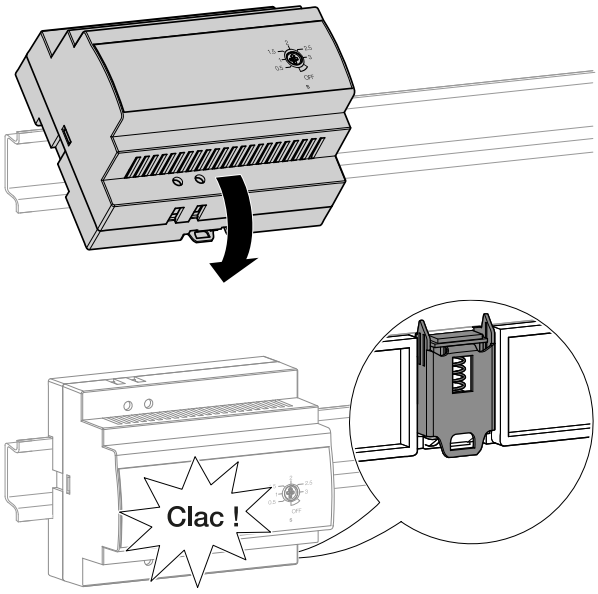

	Action	Illustration
5	1 Connect the 2 wires to the circuit breaker terminal block, 2 Connect the power supply wires to the time controller of the UVTC undervoltage release coil 3 Power it.	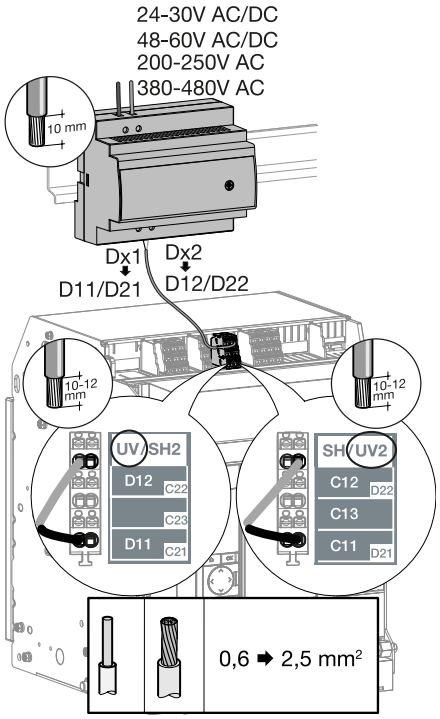
6	Set the time delay to 3 seconds using a 3 mm flat screwdriver.	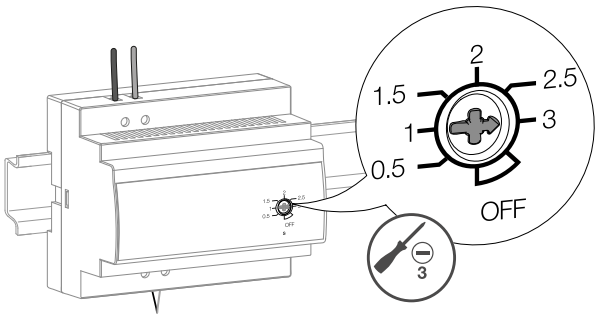
7	Charge the closing spring using the charging handle until the following indicators appear.	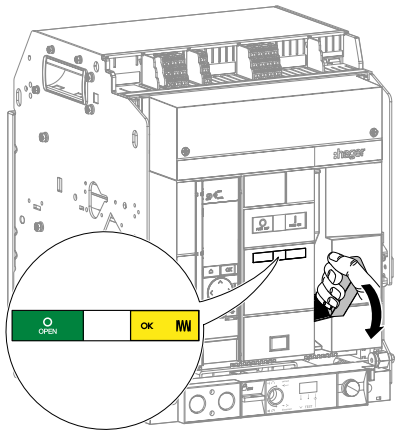

	Action	Illustration
8	Close the circuit breaker by pressing the closing push button I.	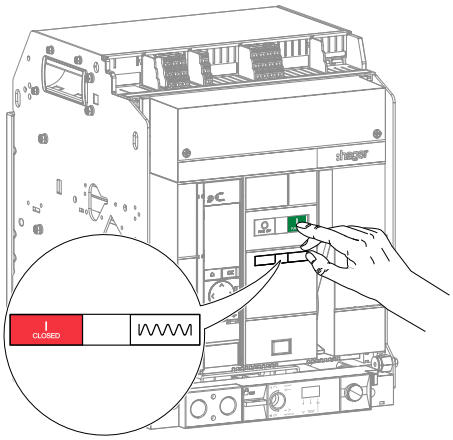
9	Cut off the power supply to the time controller and use a timer to check that the circuit breaker **opens after 3 seconds**.	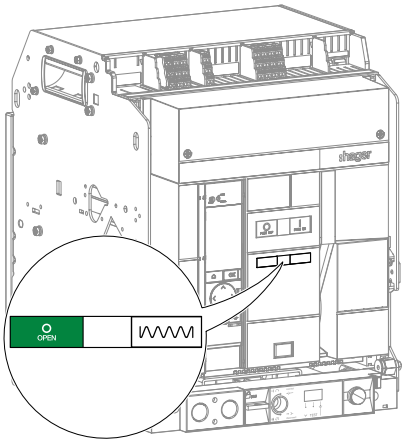
10	If necessary, put the protection cover back on the terminal block.	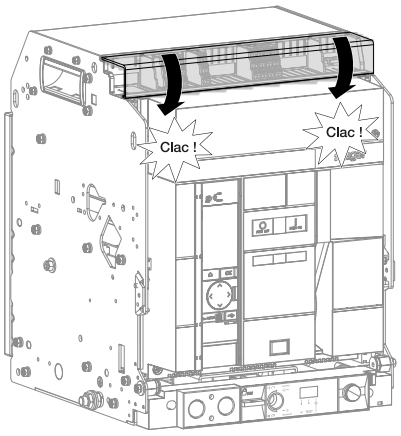

6.17 CC closing coil

For installation of a CC closing coil
follow the installation instructions described in manual 6LE009029A supplied with the product and then install a TB connection terminal block as described in manual 6LE009031A.
Then proceed with instructions 8 to 21 below.

To install a CC closing coil
First remove the circuit breaker (see Chapter 6.1, Removal of the drawout circuit breaker or see Chapter 6.4, Disassembling the fixed circuit breaker) and then follow the instructions below:

	Action	Illustration
1	Remove the connector from the CC closing coil to be replaced.	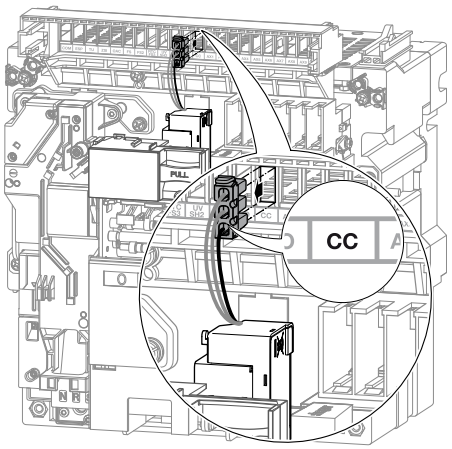
2	Press the CC closing coil and pull out the Push-Lock system.	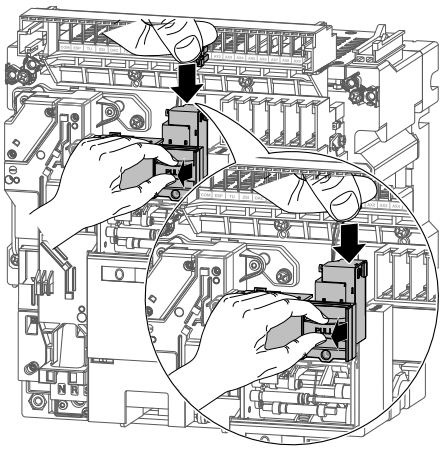

	Action	Illustration
3	Remove the defective CC closing coil.	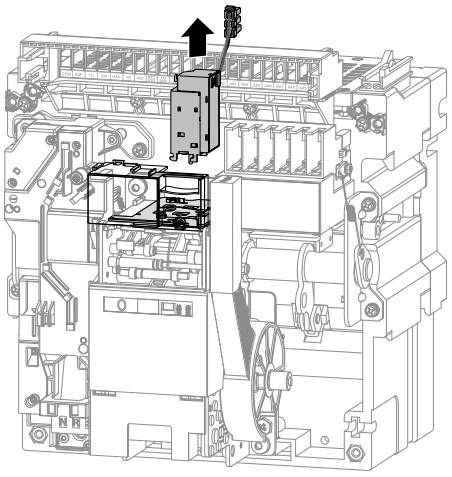
4	Then replace it with a new one.	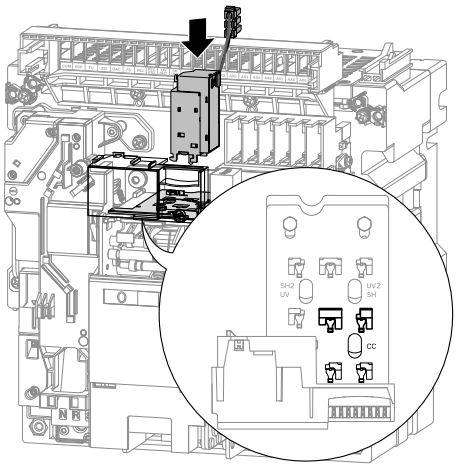
5	Press the CC closing coil and push the Push-Lock system back.	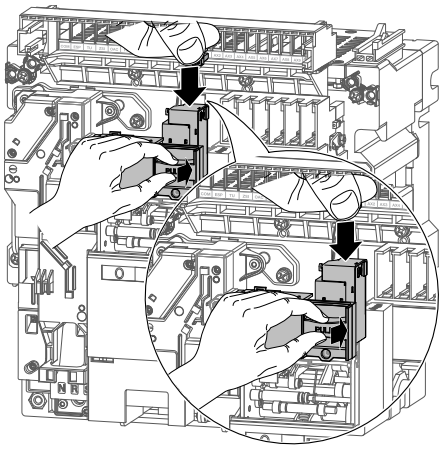

	Action	Illustration
6	Clip the connector of the new CC closing coil onto the terminal block that is marked CC.	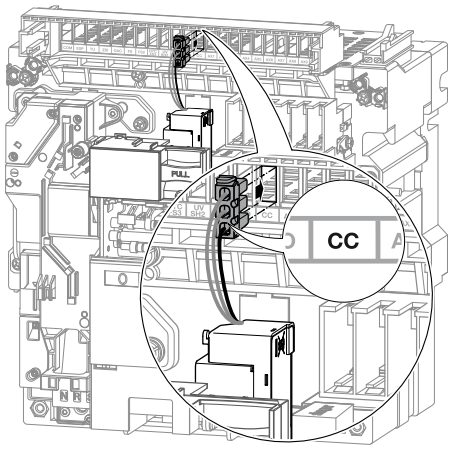
7	Refit the circuit breaker (see Chapter 6.3, Put back in place the drawout circuit breaker or see Chapter 6.6, Reassembling the fixed circuit breaker). When the re-installation steps are complete, the circuit breaker is closed.	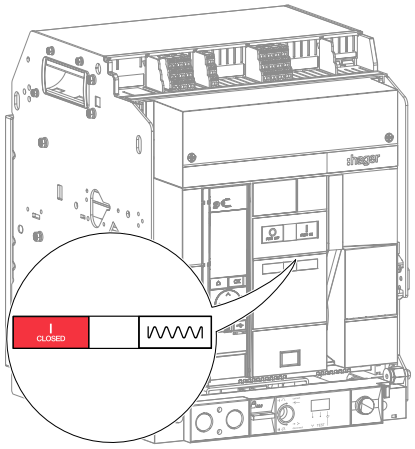
8	If necessary, unclip the protection cover from the terminal blocks.	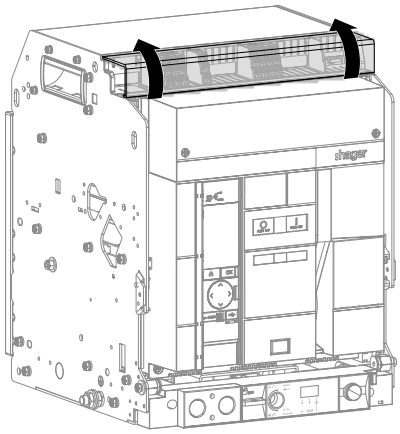

	Action	Illustration
9	Open the circuit breaker by pressing the opening push button .	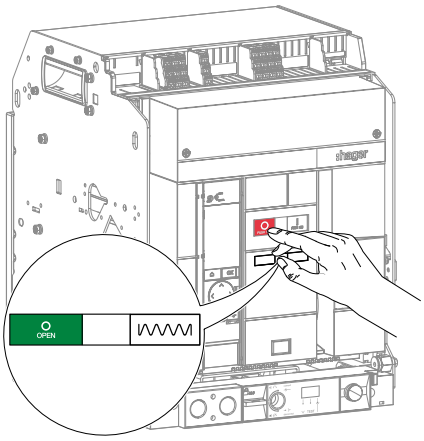
10	Charge the closing spring using the charging handle until the following indicators appear.	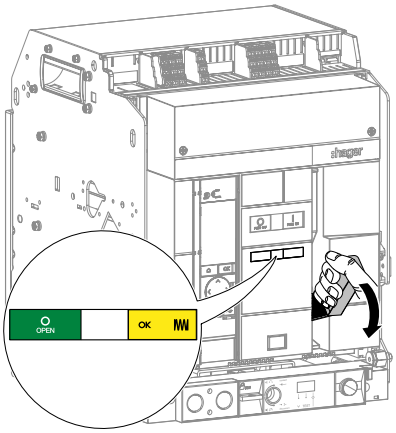

	Action	Illustration
11	Connect an external variable power supply to the terminal block that is marked CC, and supply the CC closing coil at 85% of Vn min (for example for a 200-250 V coil, Vn min = 200 V).	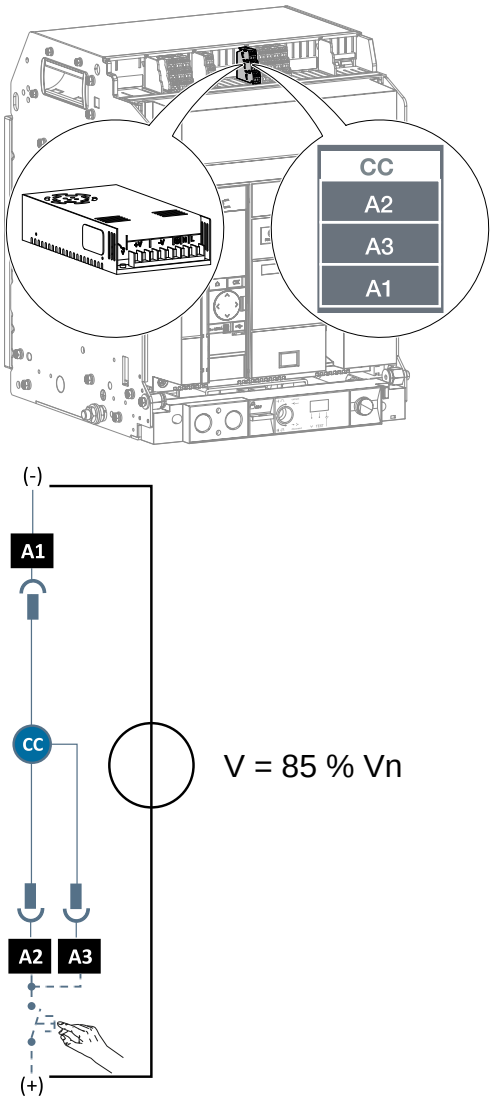
12	Check that the circuit breaker closes.	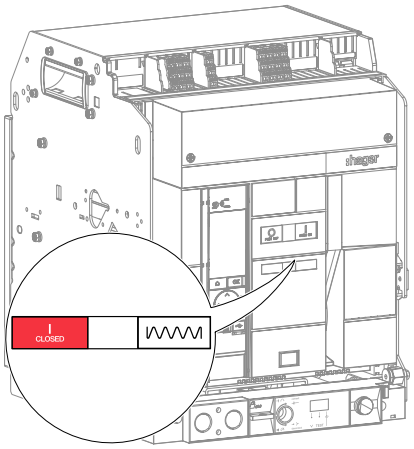

	Action	Illustration
13	Open the circuit breaker by pressing the opening push button .	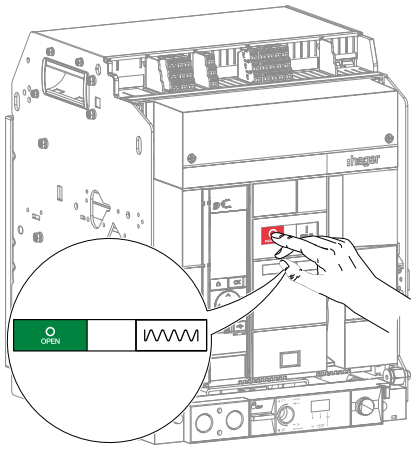
14	Charge the closing spring using the charging handle until the following indicators appear.	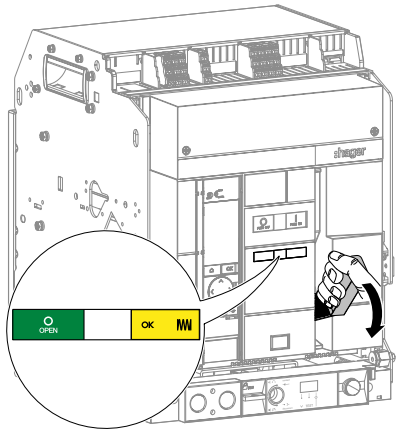
15	Set the variable external power supply of the CC closing coil to 110 % of Vn min (for example for a 200-250 V coil, Vn min = 250 V).	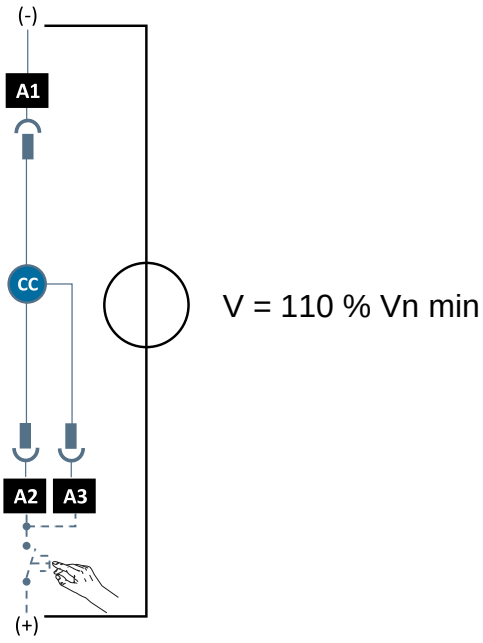

	Action	Illustration
16	Check that the circuit breaker closes.	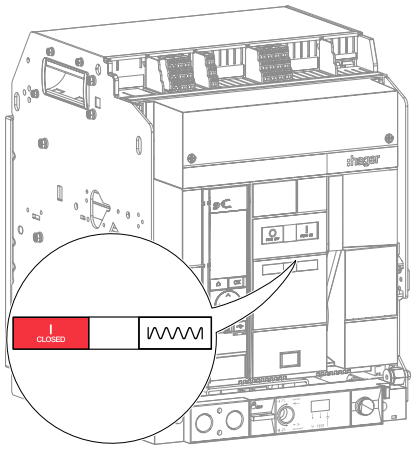
17	Open the circuit breaker by pressing the opening push button .	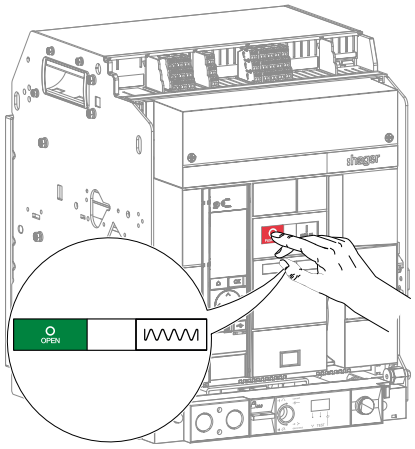
18	Charge the closing spring using the charging handle until the following indicators appear.	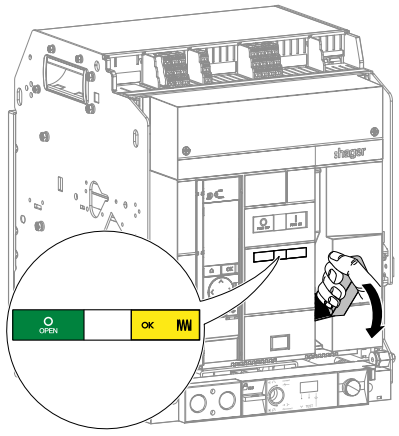

	Action	Illustration
19	Set the variable external power supply of the CC closing coil to 20 % of Vn max. (for example for a 200-250 V coil, Vn max. = 250 V).	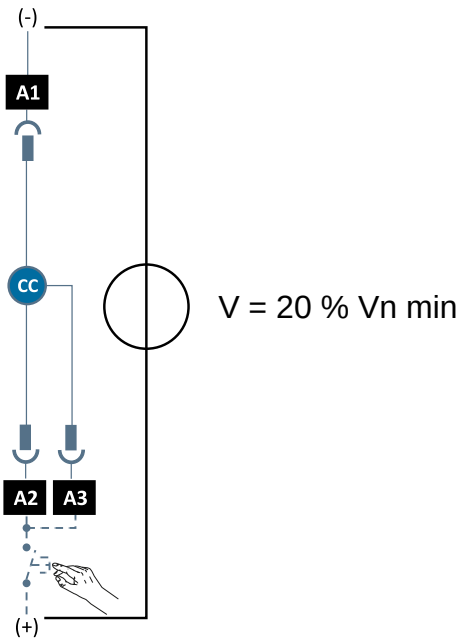
20	Check to ensure that the circuit breaker does not close.	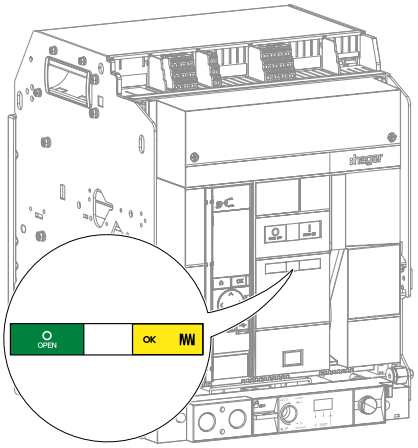
21	Put the protection cover back on the terminal block.	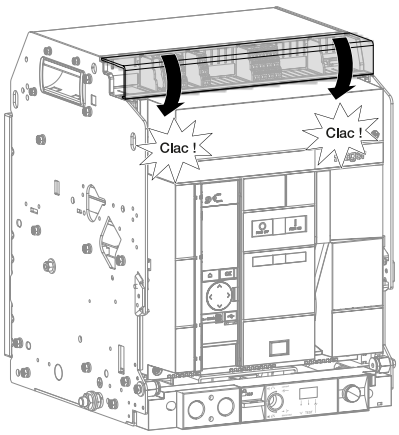

WHAT TO DO

In the event of a malfunction, refer to the Troubleshooting Guide 6LE009769A.

6.18 MO Spring charging motor

For the installation of an MO spring charging motor

Follow the installation instructions described in manual 6LE007865A, which is supplied with the product, then install a TB terminal block connection as described in manual 6LE009031A.
Then proceed to instructions 13 to 22 below.

For the replacement of an MO spring charging motor

Remove the circuit breaker first (see Chapter 6.1, Removal of the drawout circuit breaker or see Chapter 6.4, Disassembling the fixed circuit breaker) then follow the instructions below:

Warning

Risk of serious injury.

Before any intervention inside a circuit breaker, ensure that the closing spring is completely discharged.

	Action	Illustration
1	Remove the connector of the MO spring charging motor to be replaced.	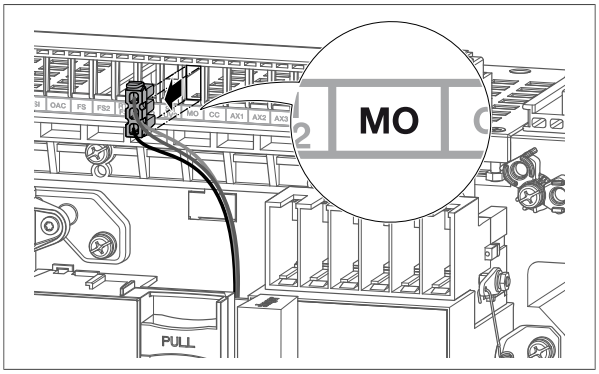
2	Remove the motor mounting screws.	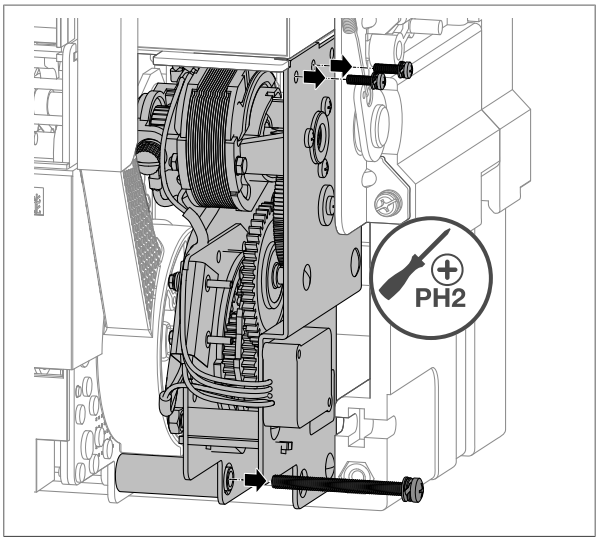

	Action	Illustration
3	Remove the motor from the arming handle shaft.	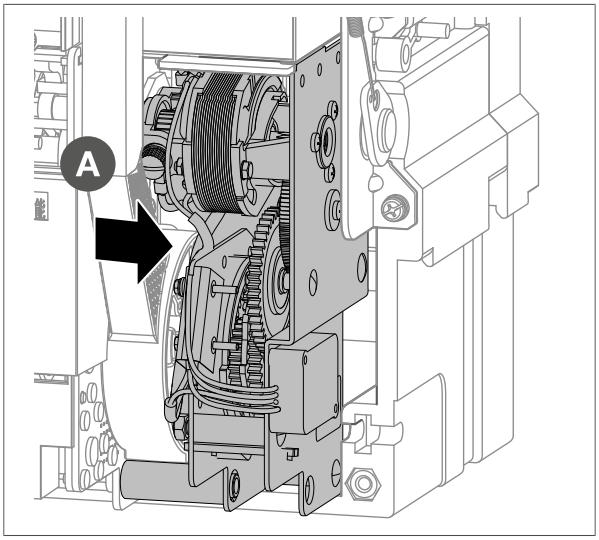
4	Remove the motor from its position.	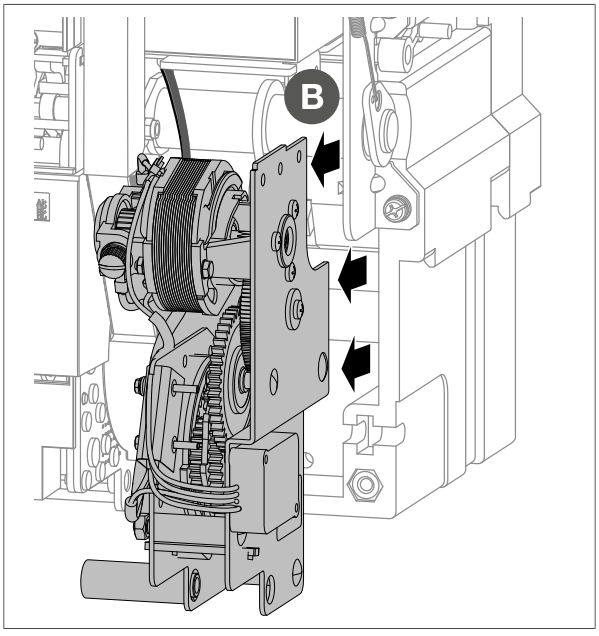

	Action	Illustration
5	Remove the motor connections from their housing.	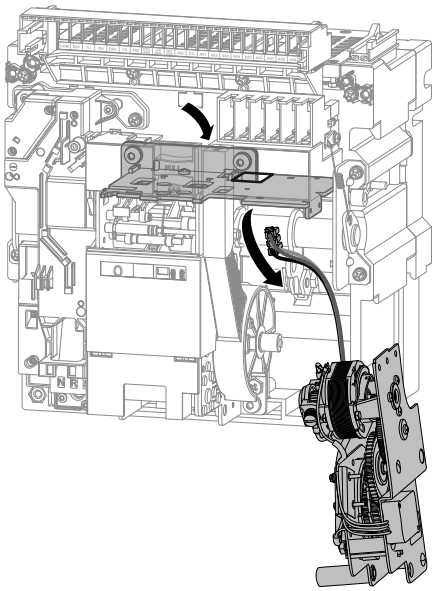
6	Replace the motor with a new one. Pass the new motor connections into the housing.	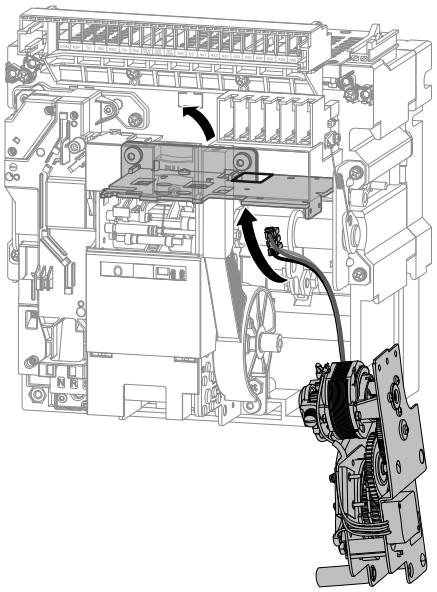
7	Take care to correctly position the notch of the motor shaft on the shaft of the arming handle.	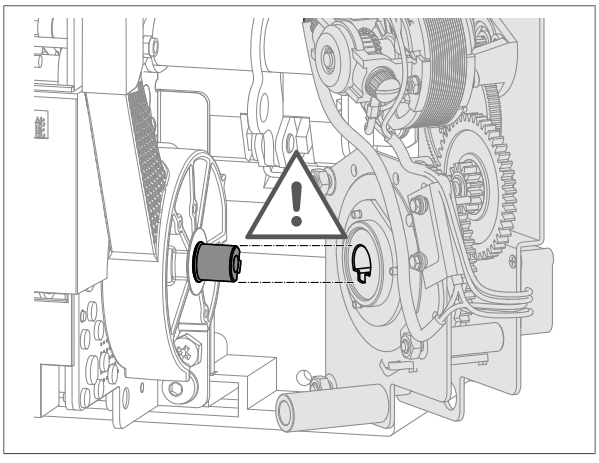

	Action	Illustration
7	(continued) If necessary, use a screwdriver to rotate the notch in the motor shaft. Do this in such a way that it can fit into the axis of the charging handle.	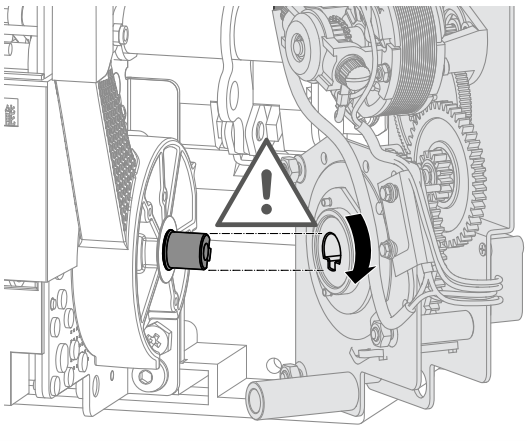 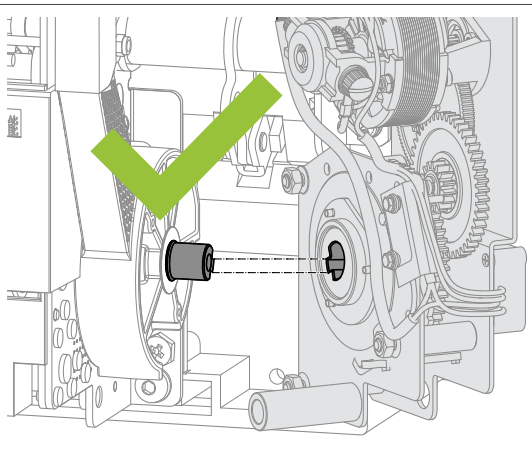
8	Position the motor in its location.	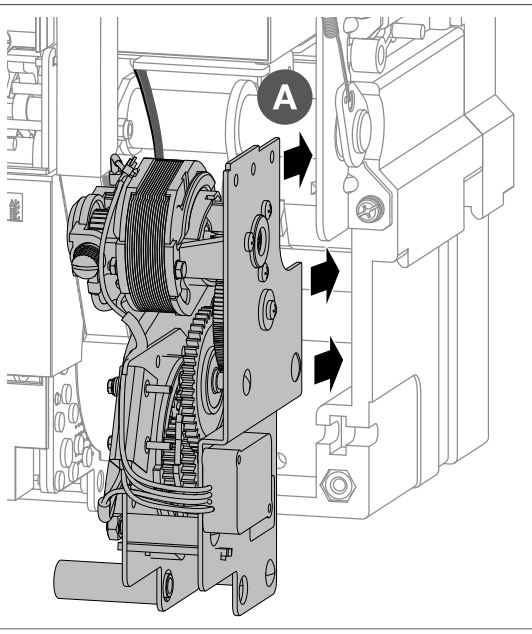

	Action	Illustration
9	Fit the motor in the shaft of the arming handle.	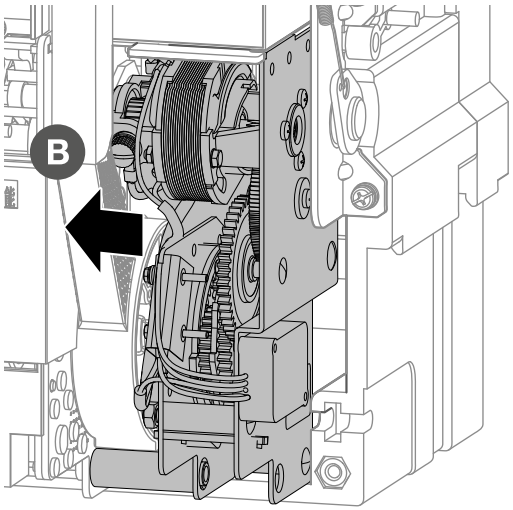
10	Refit the motor mounting screws.	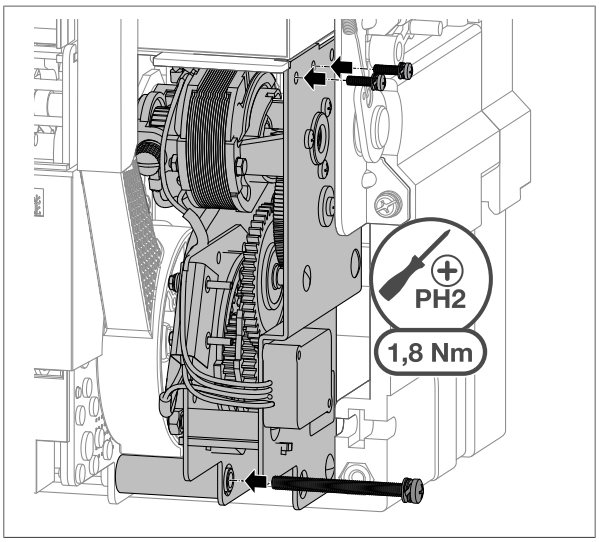
11	Clip the connector of the new MO spring charging motor onto the terminal block connection that is marked MO.	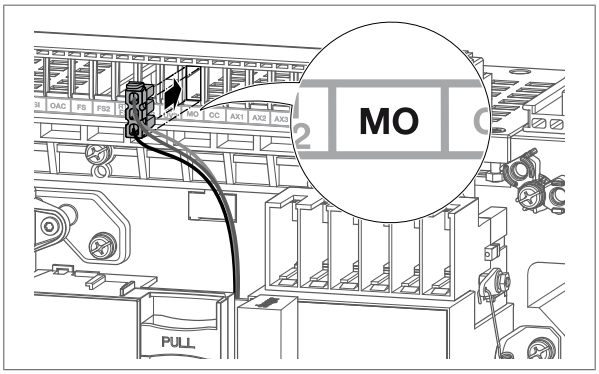

	Action	Illustration
12	Refit the circuit breaker (see Chapter 6.3, Put back in place the drawout circuit breaker or see Chapter 6.6, Reassembling the fixed circuit breaker). When the re-installation steps are complete, the circuit breaker is closed.	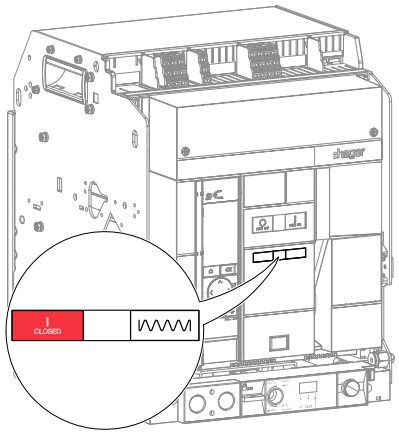
13	If necessary, unclip the protection cover from the terminal blocks.	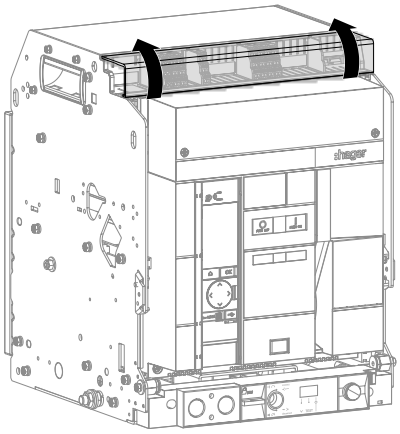
14	Disconnect the power supply to the MO spring charging motor by removing the 2 wires at the terminal block that is marked MO.	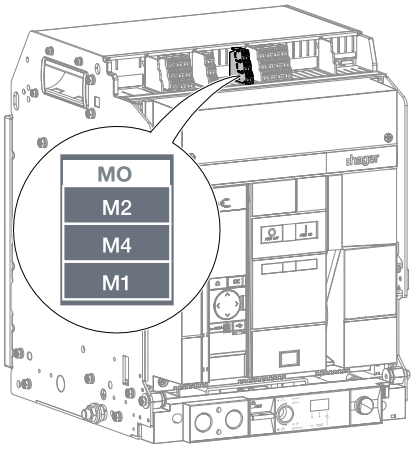

	Action	Illustration
15	Open the circuit breaker by pressing the opening push button . The indicators change status.	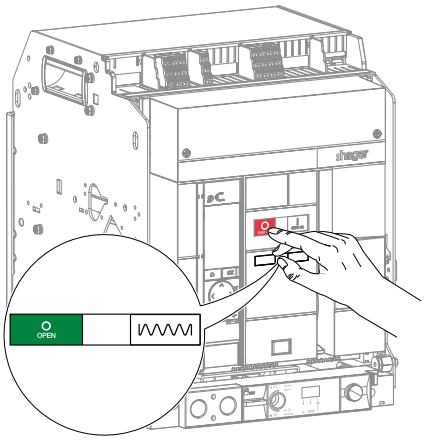
16	Charge the closing spring using the charging handle until the following indicators appear.	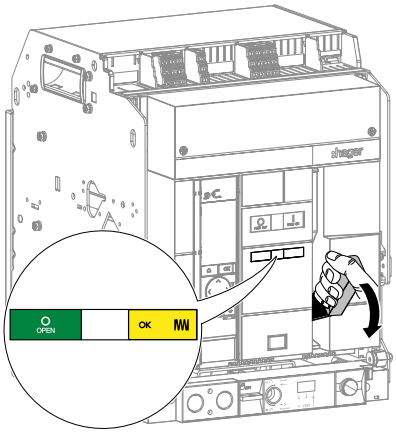
17	Close the circuit breaker by pressing the closing push button . The indicators change status.	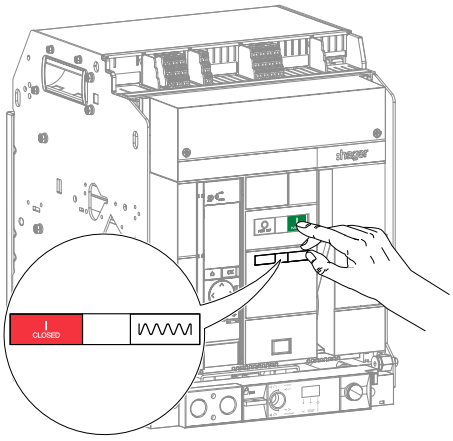

	Action	Illustration
18	Open the circuit breaker by pressing the opening push button . The indicators change status.	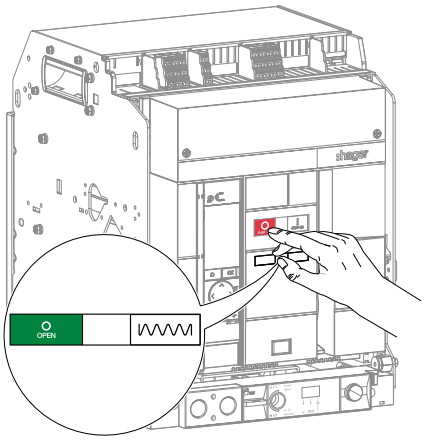
19	Connect an external variable power supply to the terminal block that is marked MO, and supply power to the MO spring charging motor with power at 85% of Vn min (for example for a 200-250 V coil, Vn min = 200 V).	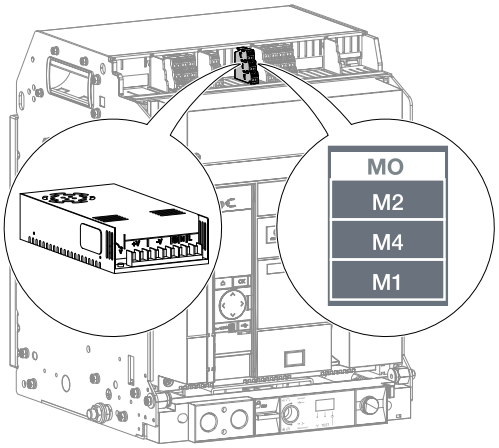 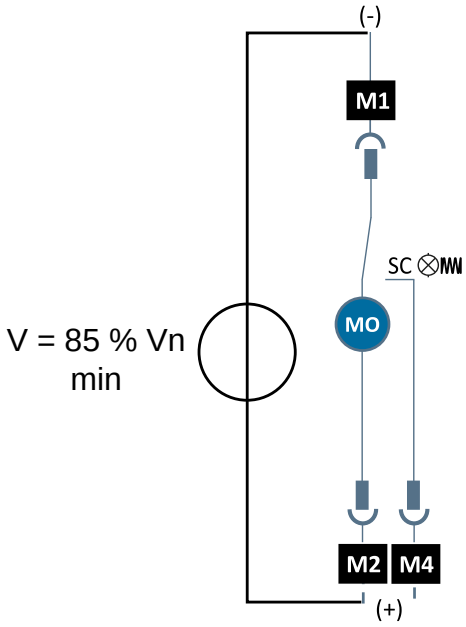

	Action	Illustration
20	Check to ensure that the closing spring charges and that the indicator displays:	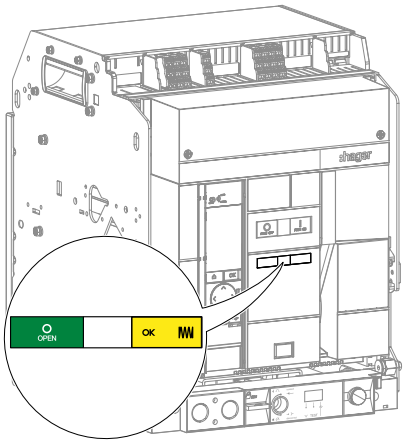
21	Check that the circuit breaker closes by pressing on the closing push button.	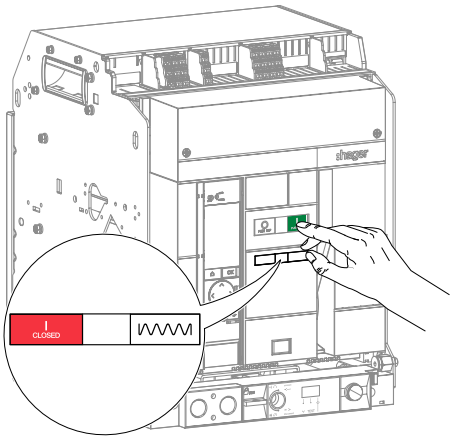
22	If necessary, put the protection cover back on the terminal block.	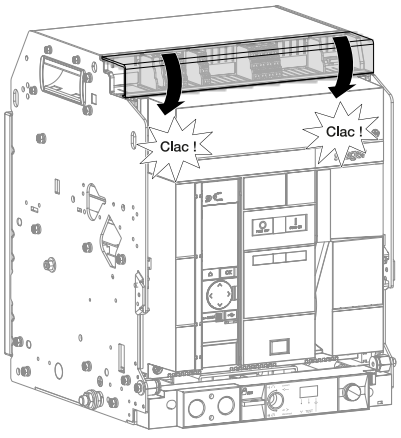

6.19 RTC Ready-to-Close contact

For the installation of an RTC ready-to-close contact

Follow the installation instructions described in manual 6LE007867A, which is supplied with the product, then install a TB terminal block connection as described in manual 6LE009031A.
Then proceed to instructions 12 to 23 below.

For the replacement of an RTC ready-to-close contact

Remove the circuit breaker first (see Chapter 6.1, Removal of the drawout circuit breaker or see Chapter 6.4, Disassembling the fixed circuit breaker) then follow the instructions below:

Warning

Risk of serious injury.

Before any intervention inside a circuit breaker, ensure that the closing spring is completely discharged.

	Action	Illustration
1	Remove the connector of the RTC ready-to-close contact to be replaced.	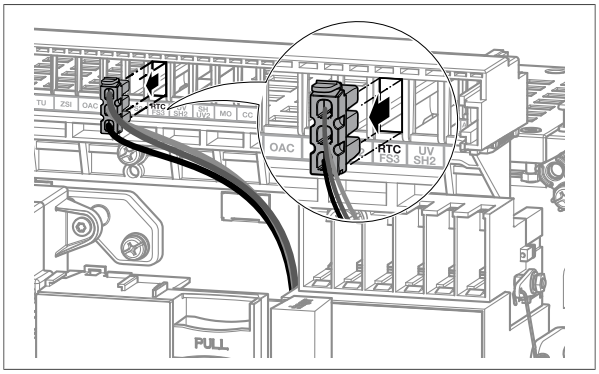
2	If necessary, remove the MO spring charging motor (see Chapter 6.18, MO Spring charging motor)	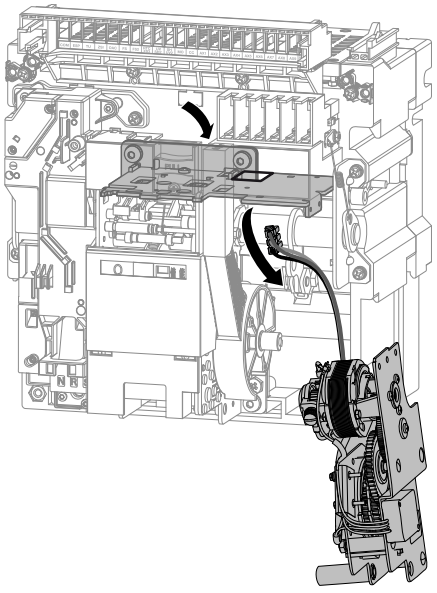

	Action	Illustration
3	The RTC ready-to-close contact is located under the AX auxiliary contacts support.	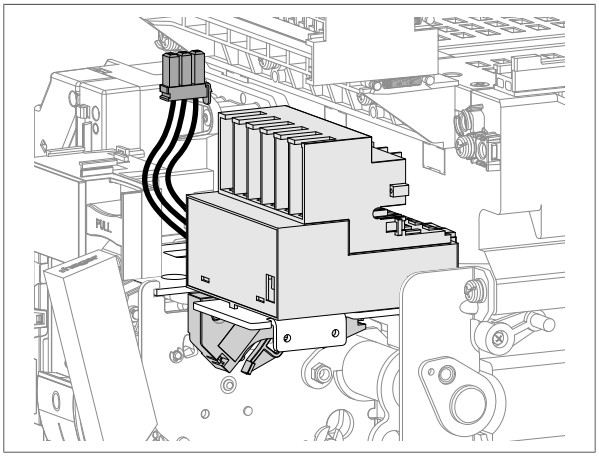
	Remove the 2 RTC ready-to-close contact screws.	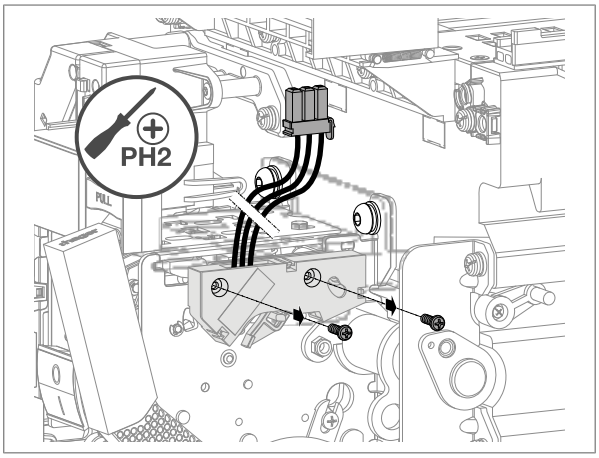
4	Remove the contact.	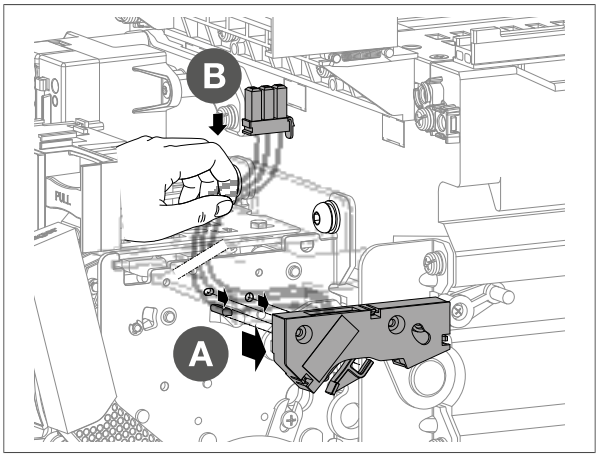

	Action	Illustration
5	Remove the contact connections, passing it through the hole in the AX auxiliary contacts support plate.	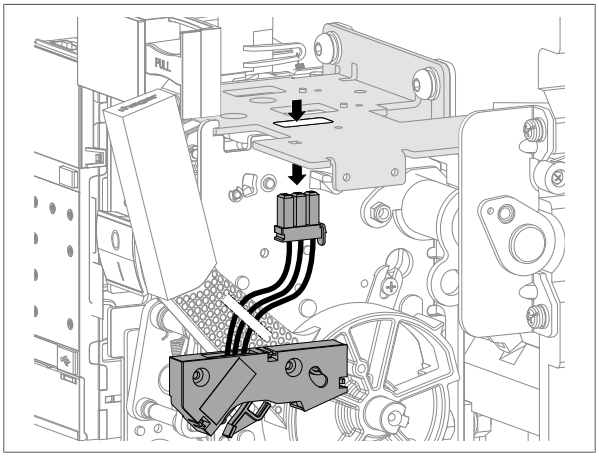
6	Replace the contact with a new one. Pass the connections through the hole in the AX auxiliary contacts support plate.	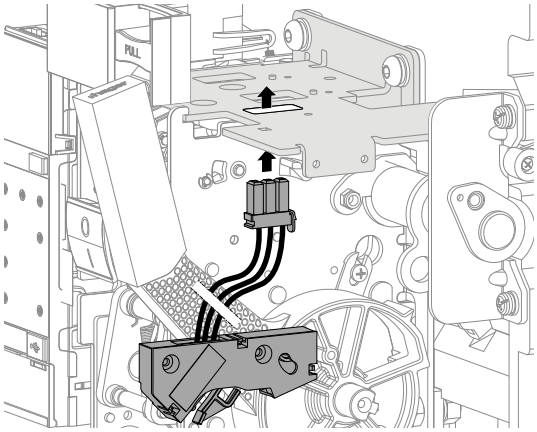
7	Put the contact back, taking care to replace it in its positioning holes.	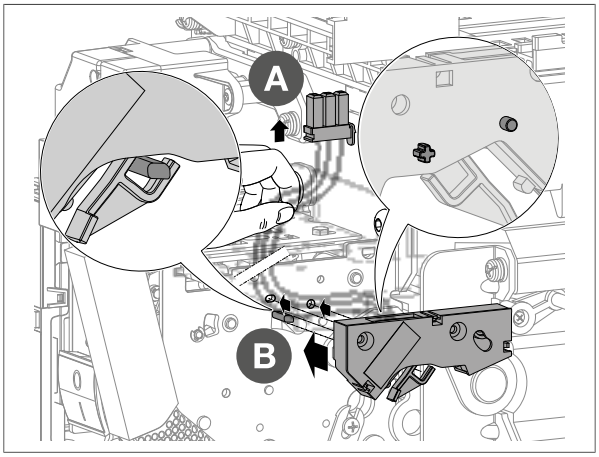

	Action	Illustration
8	Tighten the 2 RTC ready-to-close contact screws.	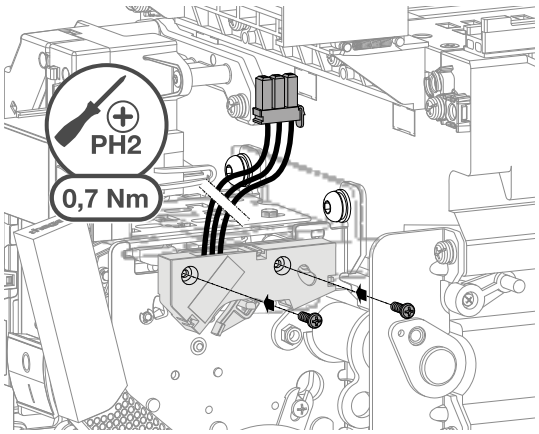
9	Clip the connector of the new RTC ready-to-close contact onto the terminal block marked RTC.	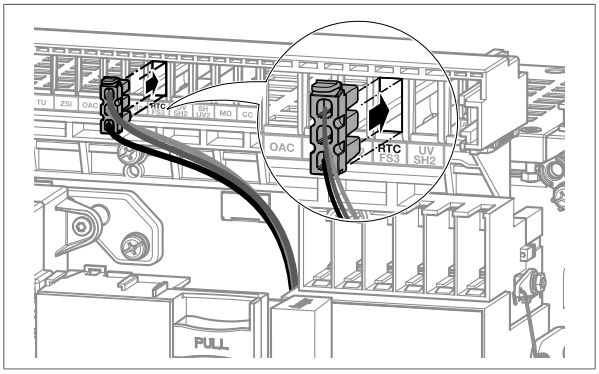
10	If necessary, refit the MO spring charging motor (see Chapter 6.18, MO Spring charging motor)	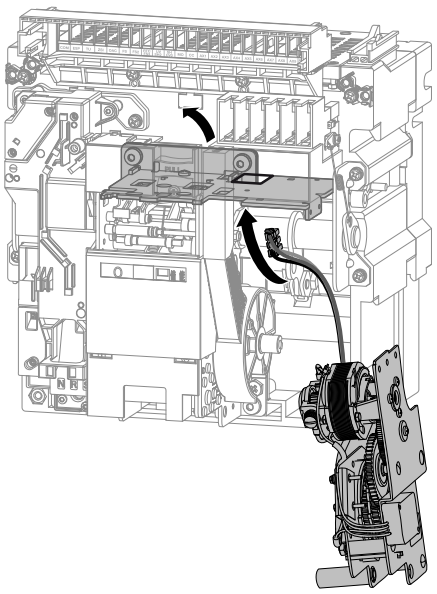

	Action	Illustration
11	Refit the circuit breaker (see Chapter 6.3, Put back in place the drawout circuit breaker or see Chapter 6.6, Reassembling the fixed circuit breaker). When the re-installation steps are complete, the circuit breaker is closed.	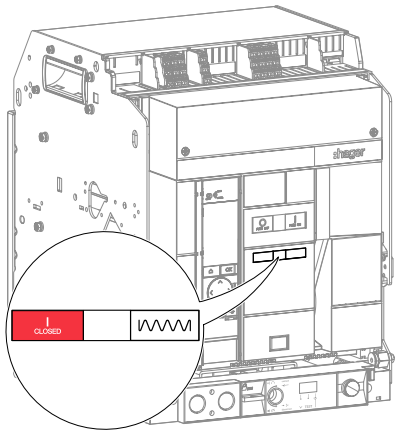
12	If necessary, unclip the protection cover from the terminal blocks.	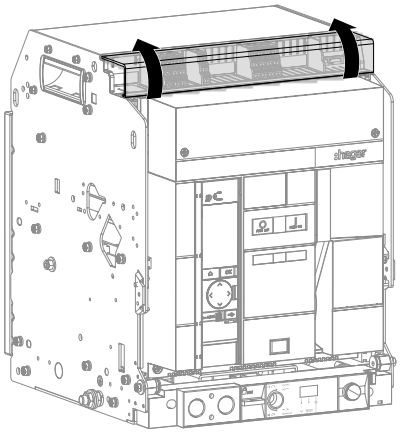
13	Disconnect the power supply to the MO spring charging motor by removing the 2 wires at the terminal block that is marked MO.	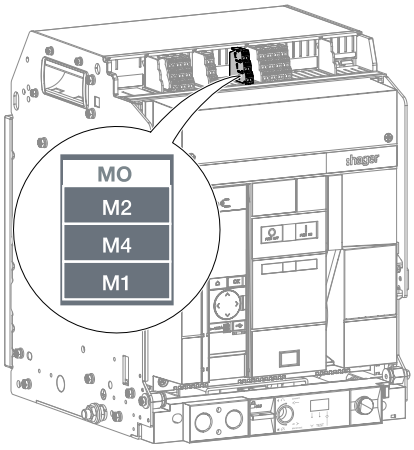

	Action	Illustration
15	Open the circuit breaker by pressing the opening push button . The indicators change status.	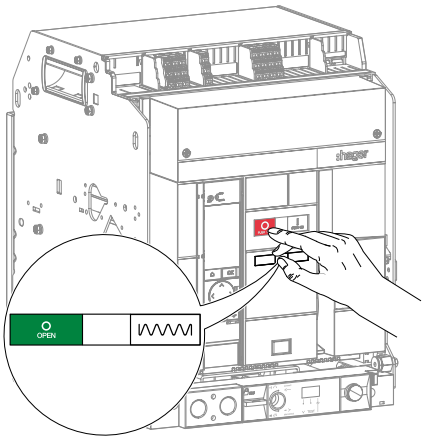
16	Charge the closing spring using the charging handle until the following indicators appear.	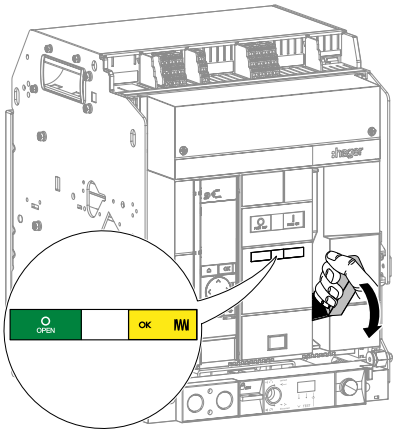
17	Close the circuit breaker by pressing the closing push button . The indicators change status.	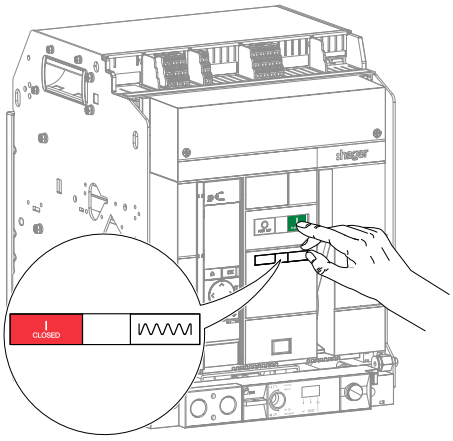

	Action	Illustration
18	Open the circuit breaker by pressing the opening push-button and check that the closing spring status indicator indicates that it has been discharged.	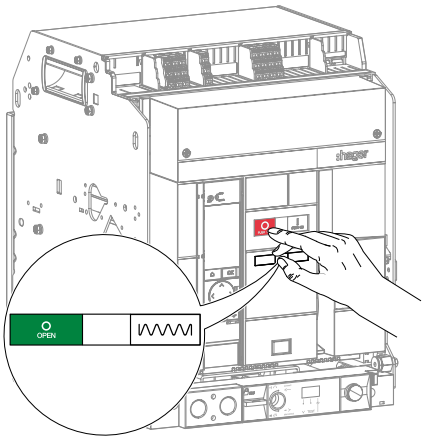
19	Disconnect the cables connected to the RTC terminal block beforehand, then check using an ohmmeter: • the continuity between the terminals: R1 and R2 • the non-continuity between the terminals: R1 and R4.	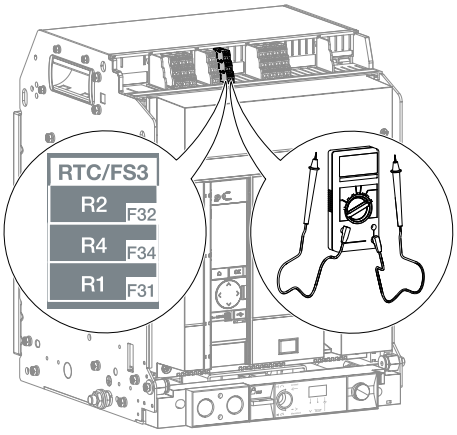 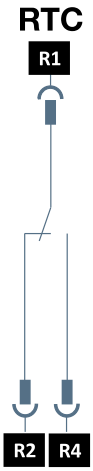

	Action	Illustration
20	Charge the closing spring using the charging handle until the following indicators appear. Check to ensure that the closing spring status indicator indicates that the spring is charged.	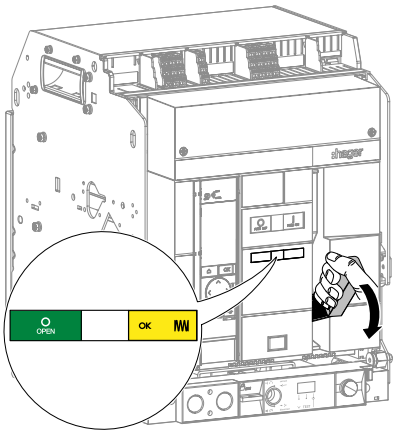
21	Check using an ohmmeter: • the continuity between the terminals: R1 and R4 • the non-continuity between the terminals: R1 and R2.	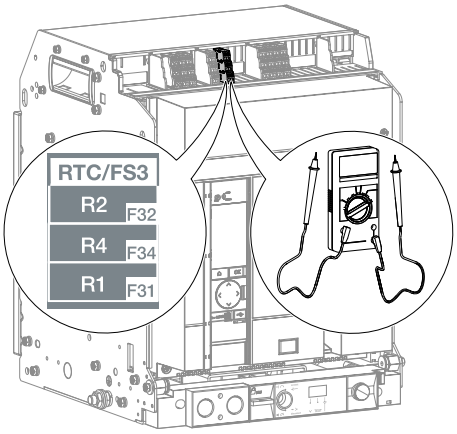 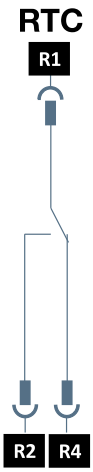

Information

The RTC ready to close contact indicates that the circuit breaker has verified the closing conditions and that it is ready to receive the closing command.

The contact changes status when all of these conditions are met:

- the circuit breaker is open,
- the status indicator of the closing spring shows it is in the charged state,
- the UV undervoltage release coil (if present) is powered,
- the SH shunt trip coil (if present) is not powered,
- the circuit breaker is in the Connected or Test position,
- the circuit breaker is not locked in the open state by a padlock or key,
- the circuit breaker is not interlocked with a second circuit breaker,
- the 'RESET' re-arm button is pressed.

The circuit breaker can now be closed manually or remotely using a closing coil.

	Action	Illustration
22	Perform an MO spring charging motor test (see Chapter 6.18, MO Spring charging motor instructions 14 to 22).	
23	Reconnect the cables originally connected to the RTC terminal block and, if necessary, replace the protective cover of the terminal blocks.	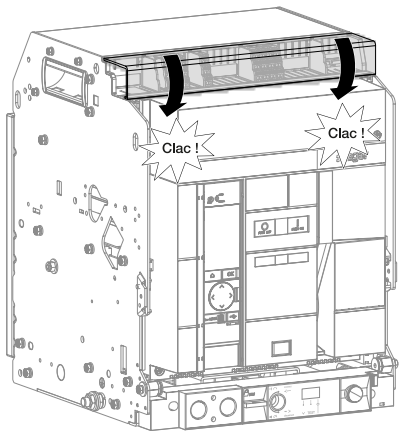

6.20 ENCT External Neutral Sensor

For the installation of an ENCT external neutral sensor

Follow the installation instructions described in manual 6LE007879A (HW2) or 6LE009124A (HW4), as supplied with the product, and then install a TB terminal connection block as described in manual 6LE009031A.
Then proceed with instructions 9 to 21 below.

For the replacement of an ENCT HW2 external neutral sensor

Follow the instructions below:

	Action	Illustration
1	If necessary, unclip the protection cover from the terminal blocks.	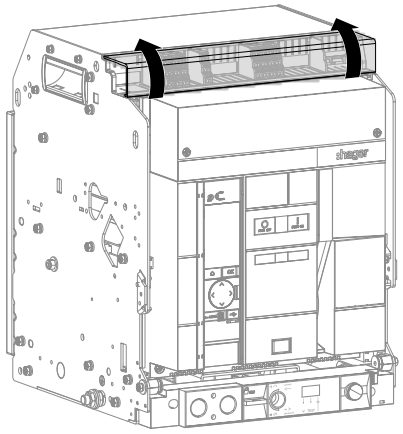
2	Remove the wires from the ENCT external neutral sensor at the ESP terminals 4th S1 and 4th S2.	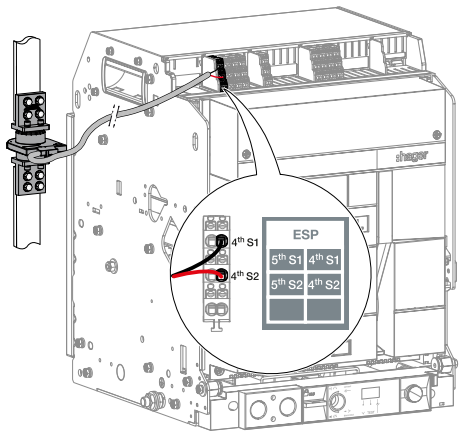

	Action	Illustration
3	Remove the ENCT external neutral sensor from the neutral bars.	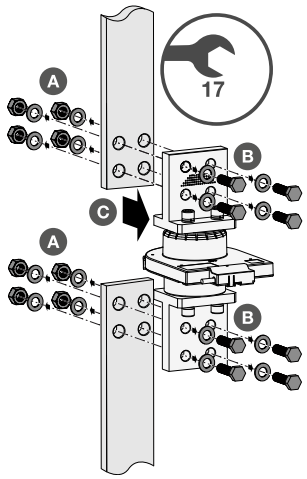
4	Use a new ENCT external neutral sensor, then insert the central axis into the sensor by sliding it into the 2 grooves.	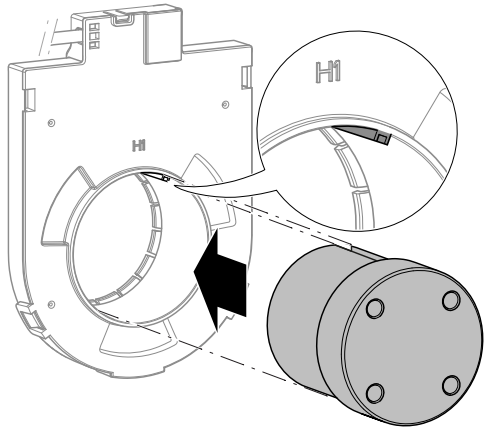
5	Wire the connections to the ENCT external neutral sensor.	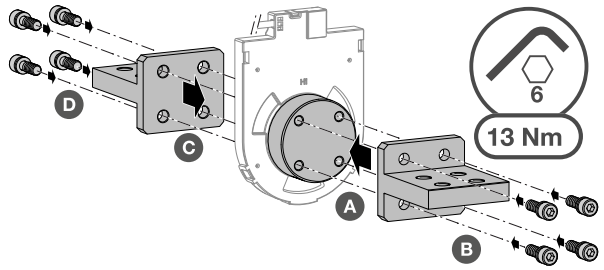
6	Position the ENCT external neutral sensor in the correct orientation. The H1 mark should be on the source side and the H2 mark on the load side.	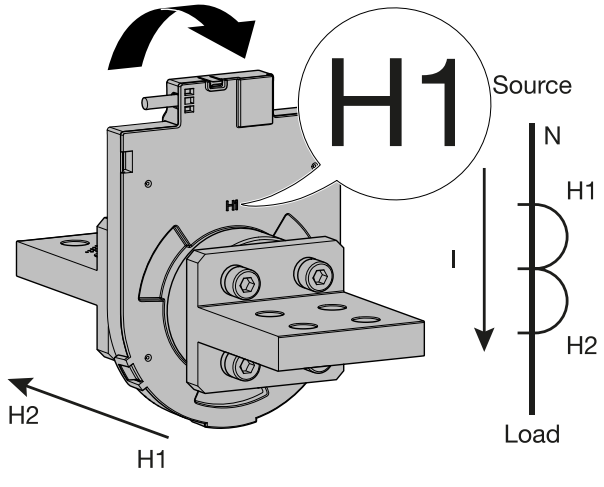

	Action	Illustration
7	Fasten the ENCT external neutral sensor to the neutral bars using connecting screws of class 8.8 minimum.	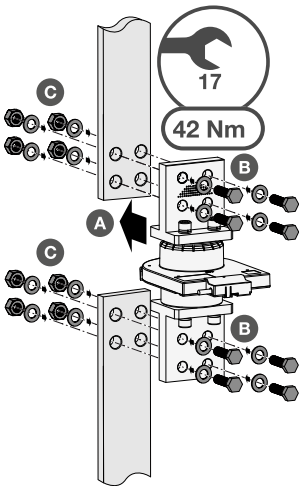
8	Connect the ENCT external neutral sensor to the ESP terminals 4th S1 and 4th S2.	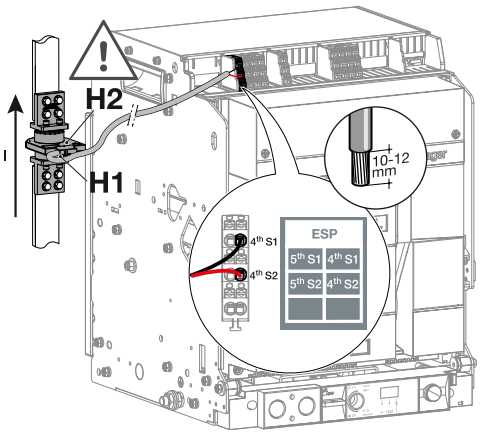
9	If required, remove the seal to open the trip unit transparent cover.	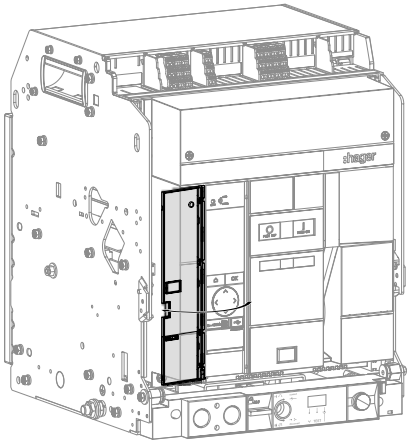

	Action	Illustration
10	For a circuit breaker fitted with a sentinel trip unit, insert a flat screwdriver into the notch, then open the trip unit hatch.	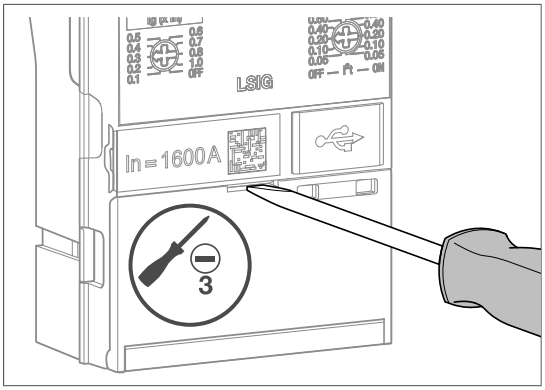 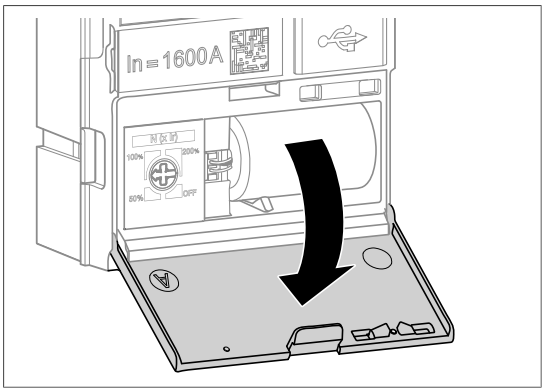
11	Set the neutral protection to a value other than OFF.	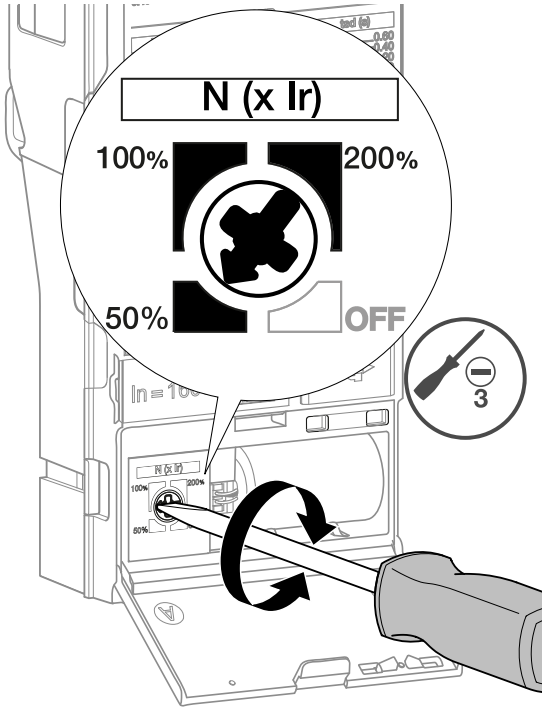

	Action	Illustration
12	Close the cover.	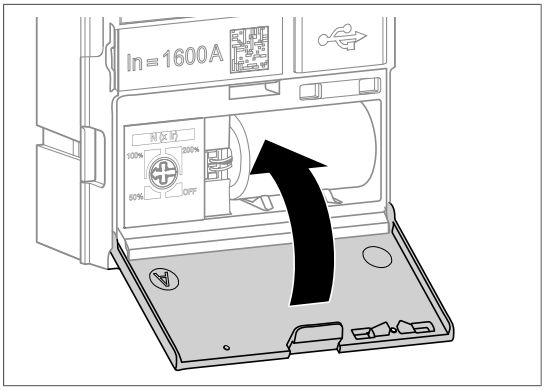
13	For a circuit breaker equipped with a sentinel Energy trip device, check that neutral protection is activated (Protection/Neutral menu).	
14	Remove the USB-C port cover.	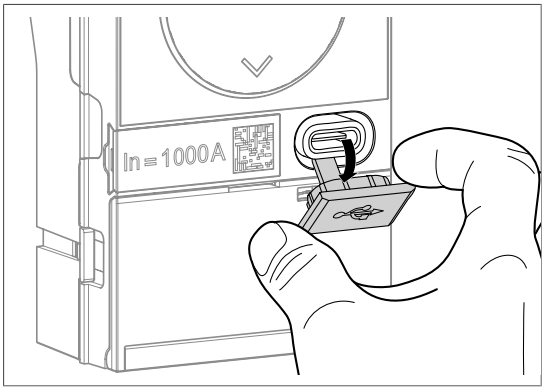
15	Connect the external battery to the USB-C port.	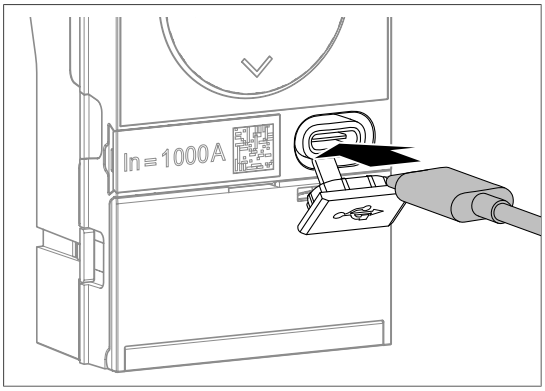

	Action	Illustration
16	On a **sentinel trip unit**, the display lights up. Verify that the ReadyToProtect indicator is flashing and that no error codes are displayed. On a **sentinel Energy trip unit**, the display briefly shows :hager and the ReadyToProtect indicator lights up. Verify that no system alarms are displayed.	 Fig. 15: sentinel and sentinel Energy trip unit 1 ReadyToProtect indicator

WHAT TO DO

In the event of a malfunction, refer to the Troubleshooting Guide 6LE009769A.

	Action	Illustration
17	Remove the external battery.	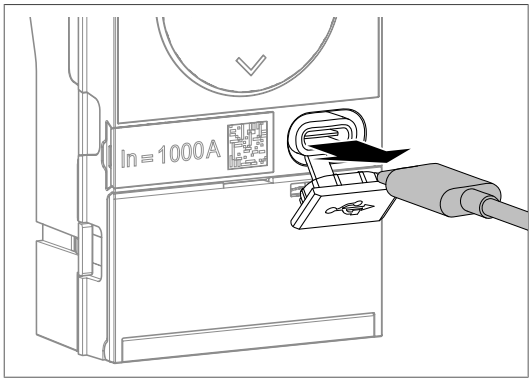
18	Close the USB-C port cover.	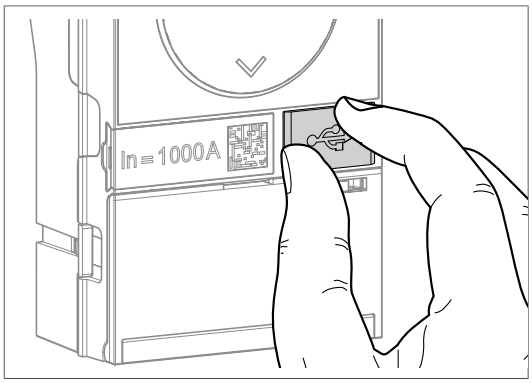

	Action	Illustration
19	Close the transparent cover.	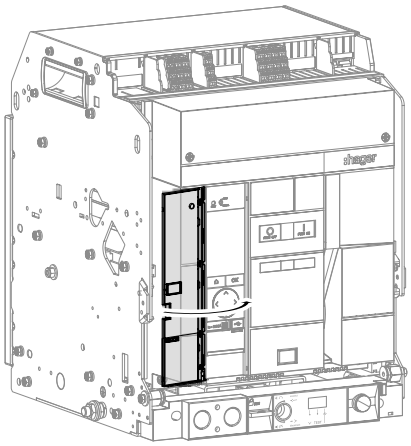
20	Apply a seal to the cover if necessary.	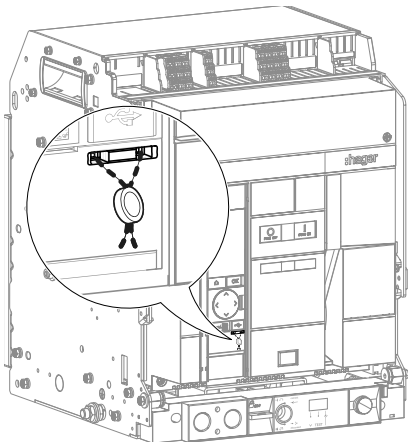
21	If necessary, put the protection cover back on the terminal block,	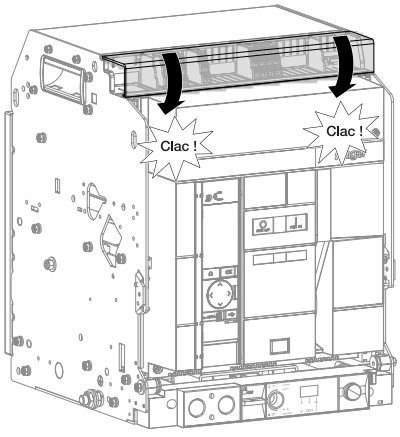

For the replacement of an ENCT HW4 external neutral sensor

Follow the instructions below:

	Action	Illustration
1	If necessary, unclip the protection cover from the terminal blocks.	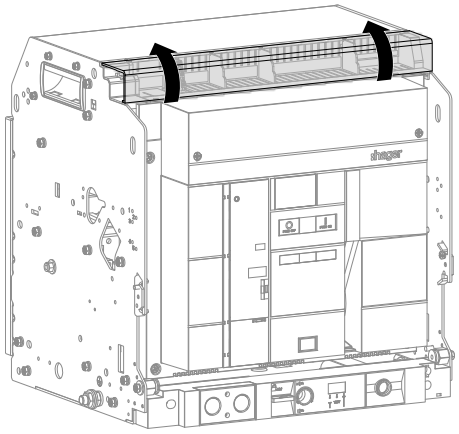
2	Remove the wires from the ENCT external neutral sensor at the ESP terminals 4th S1 and 4th S2.	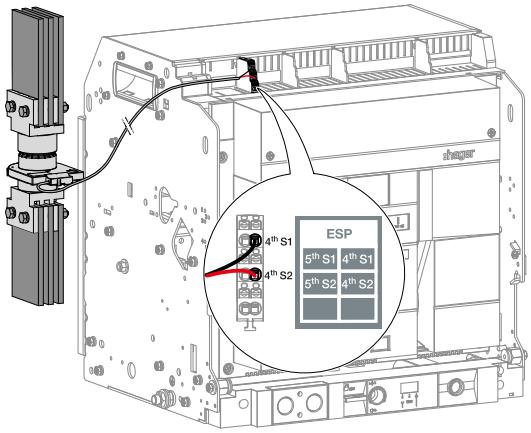
3	Remove the ENCT external neutral sensor from the neutral bars.	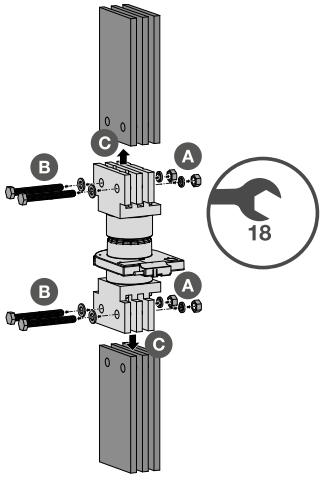

	Action	Illustration
4	Use a new ENCT external neutral sensor, then insert the central axis into the sensor by sliding it into the 2 grooves.	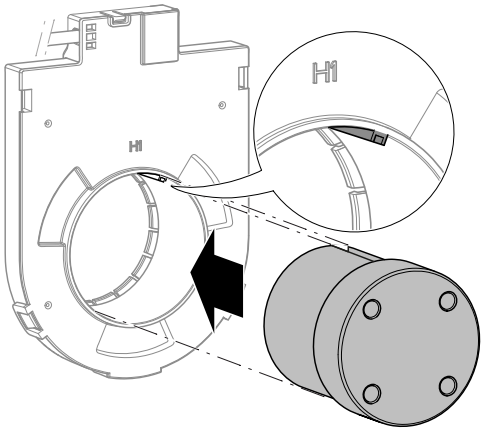
5	Wire the connections to the ENCT external neutral sensor.	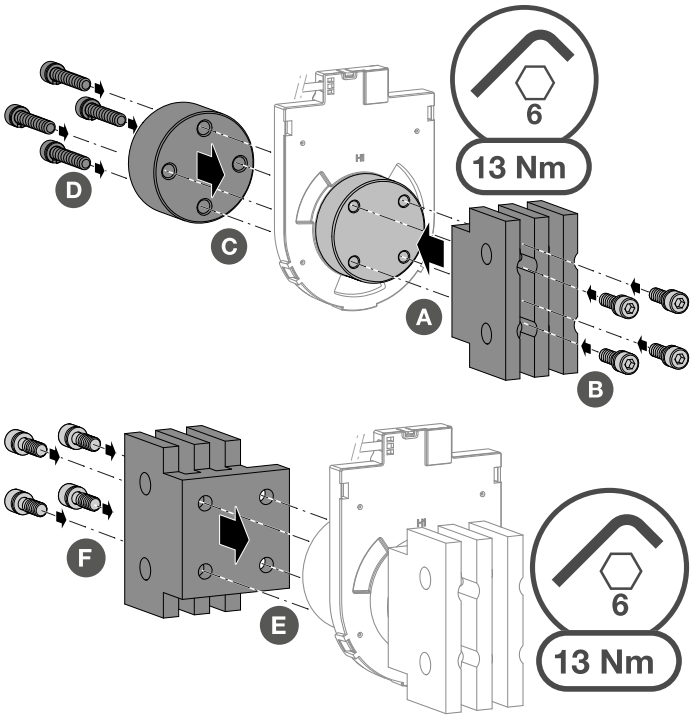
6	Position the ENCT external neutral sensor in the correct orientation. The H1 mark should be on the source side and the H2 mark on the load side.	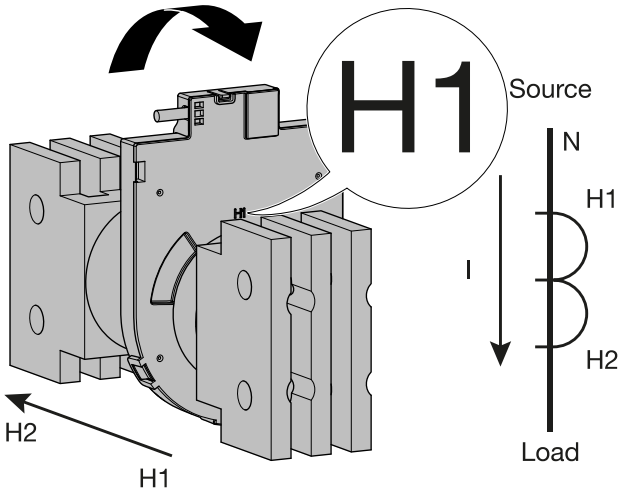

	Action	Illustration
7	Fasten the ENCT external neutral sensor to the neutral bars using connecting screws of class 8.8 minimum.	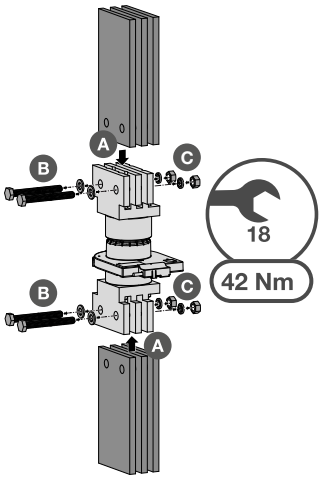
8	Connect the ENCT external neutral sensor to the ESP terminals 4th S1 and 4th S2.	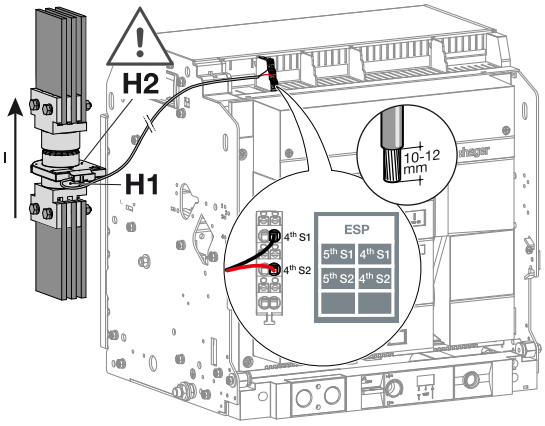
9	If required, remove the seal to open the trip unit transparent cover.	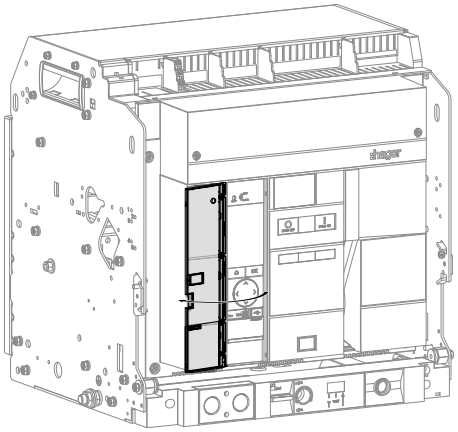

	Action	Illustration
10	For a circuit breaker fitted with a sentinel trip unit, insert a flat screwdriver into the notch, then open the trip unit hatch.	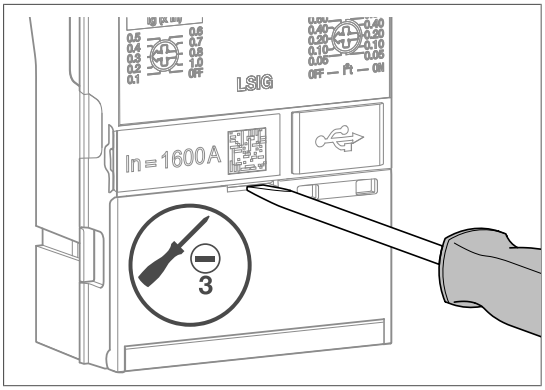 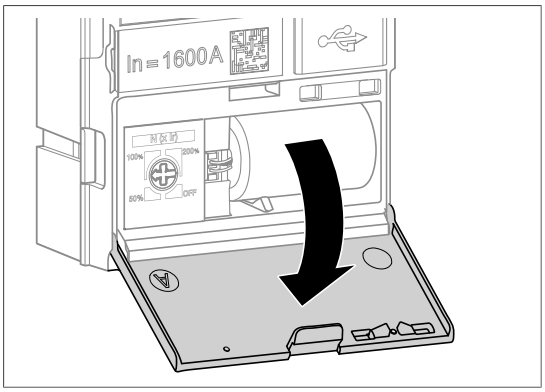
11	Set the neutral protection to a value other than OFF.	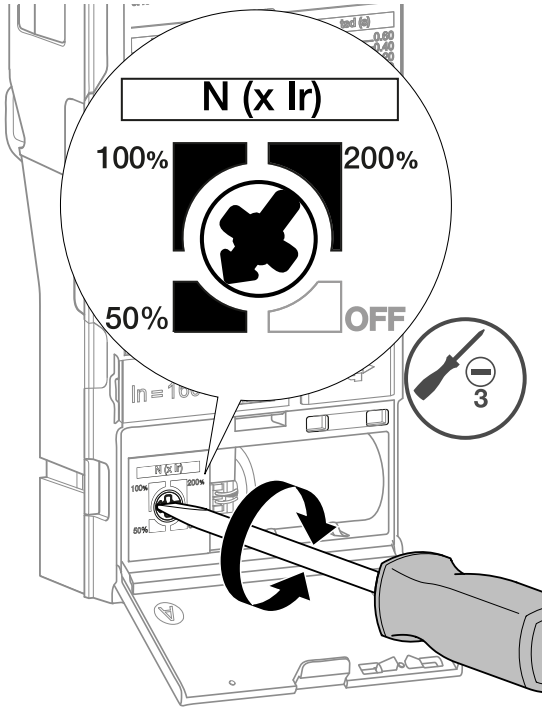

	Action	Illustration
12	Close the cover.	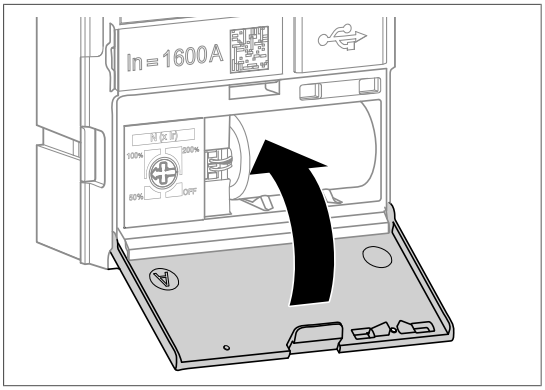
13	For a circuit breaker equipped with a sentinel Energy trip device, check that neutral protection is activated (Protection/Neutral menu).	
14	Remove the USB-C port cover.	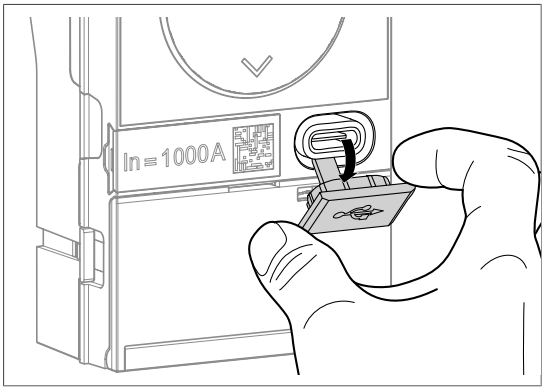
15	Connect the external battery to the USB-C port.	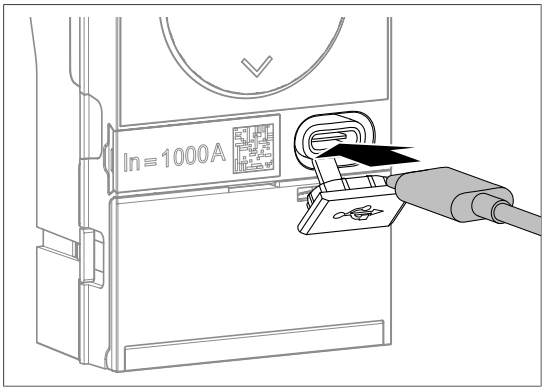

	Action	Illustration
16	On a **sentinel trip unit**, the display lights up. Verify that the ReadyToProtect indicator is flashing and that no error codes are displayed. On a **sentinel Energy trip unit**, the display briefly shows :hager and the ReadyToProtect indicator lights up. Verify that no system alarms are displayed.	 Fig. 16: sentinel and sentinel Energy trip unit 1 ReadyToProtect indicator

WHAT TO DO

In the event of a malfunction, refer to the Troubleshooting Guide 6LE009769A.

	Action	Illustration
17	Remove the external battery.	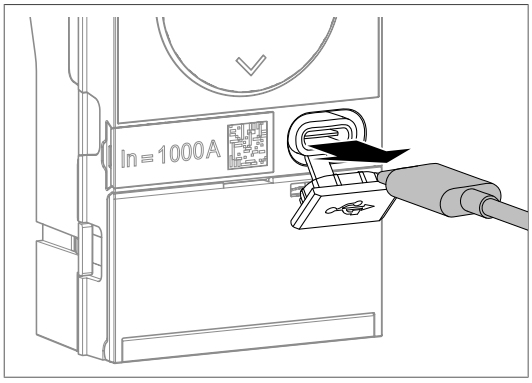
18	Close the USB-C port cover.	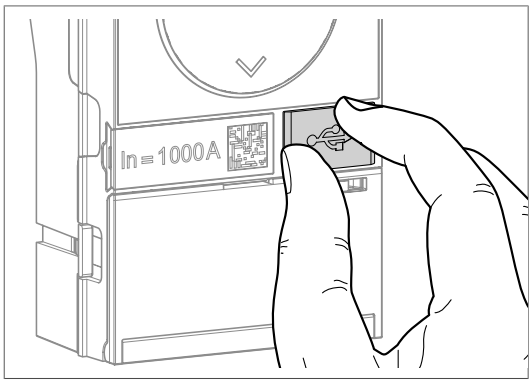

	Action	Illustration
19	Close the transparent cover.	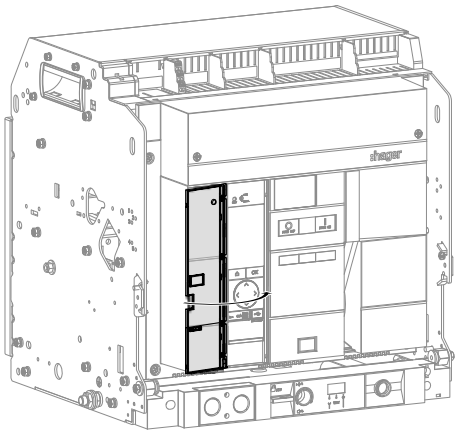
20	Apply a seal to the cover if necessary.	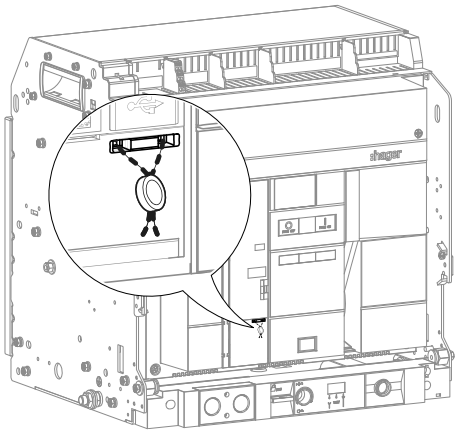
21	If necessary, put the protection cover back on the terminal block,	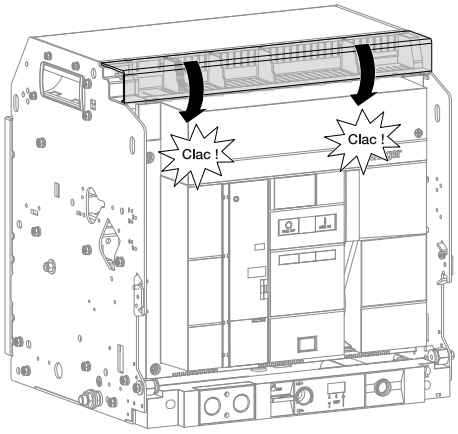

6.21 CYC Operation Cycle Counter

For the installation of a CYC cycle counter

Follow the installation instructions described in manual 6LE007868A, which is provided with the product, then proceed to instructions 8 to 18 below.

For the replacement of a CYC cycle counter

Remove the circuit breaker first (see Chapter 6.1, Removal of the drawout circuit breaker or see Chapter 6.4, Disassembling the fixed circuit breaker) then follow the instructions below:

Warning

Risk of serious injury.

Before any intervention inside a circuit breaker, ensure that the closing spring is completely discharged.

	Action	Illustration
1	Insert a screwdriver, unclip and remove the mechanism cover.	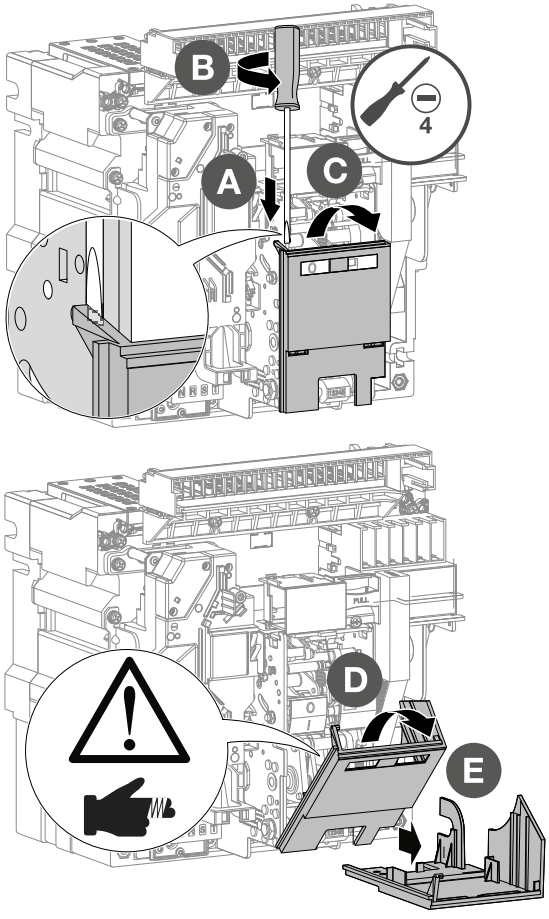

	Action	Illustration
2	Unscrew, then remove the CYC cycle counter that is to be replaced.	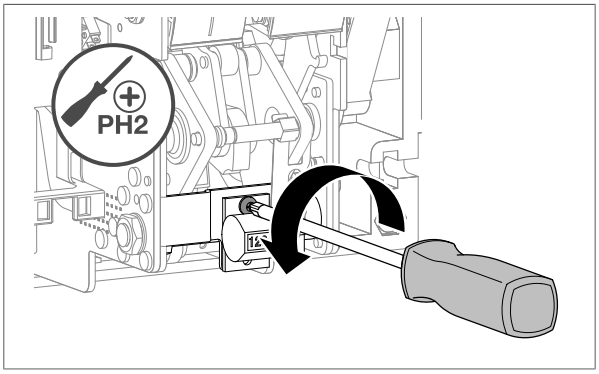 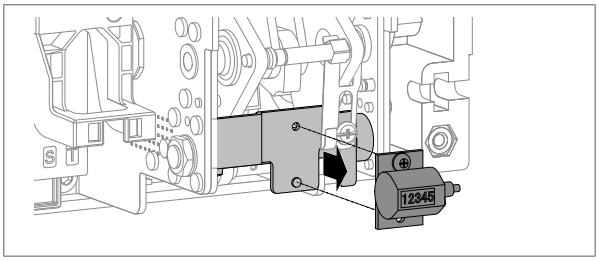
3	Check that the counter mechanism is correctly installed in line with the fixing screw and reposition it if necessary.	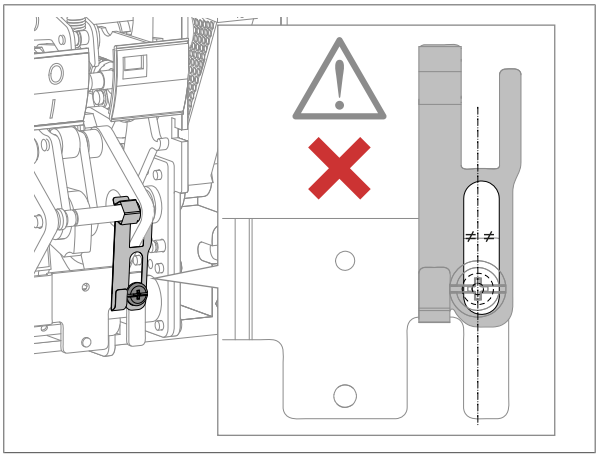 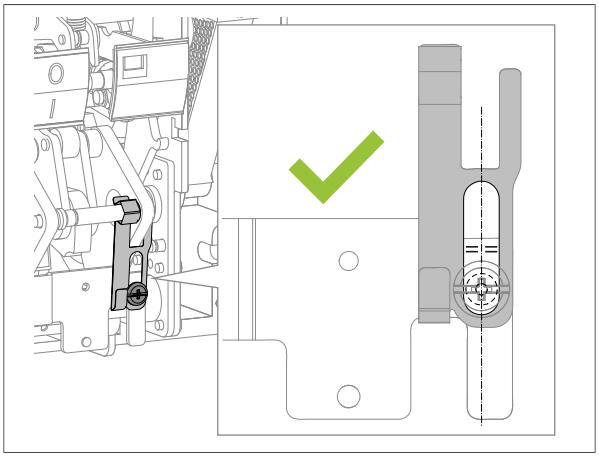

	Action	Illustration
4	If necessary, remove the counter mechanism and replace with a new one.	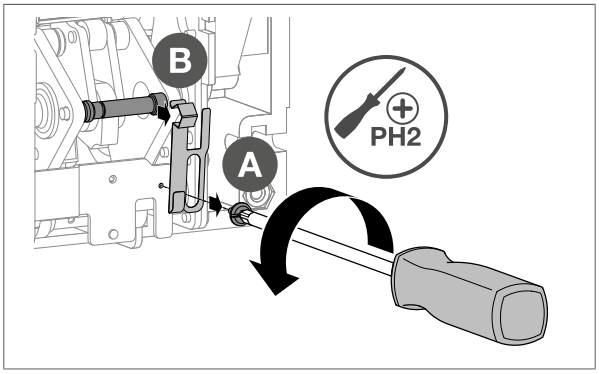 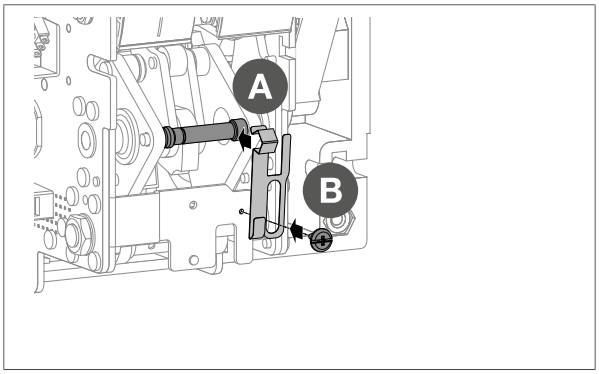 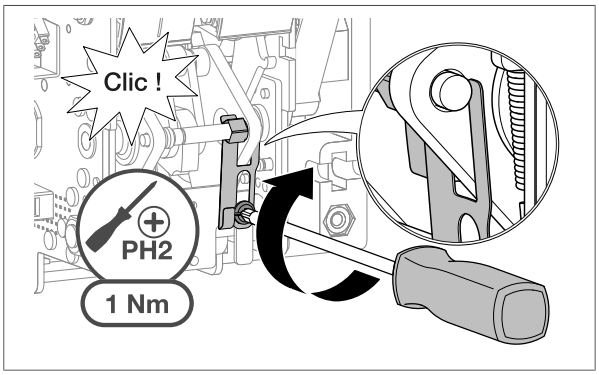
5	Refit a new CYC cycle counter and screw it in.	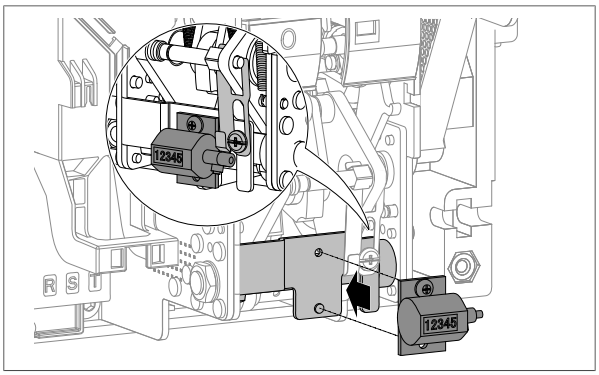

	Action	Illustration
	(continued)	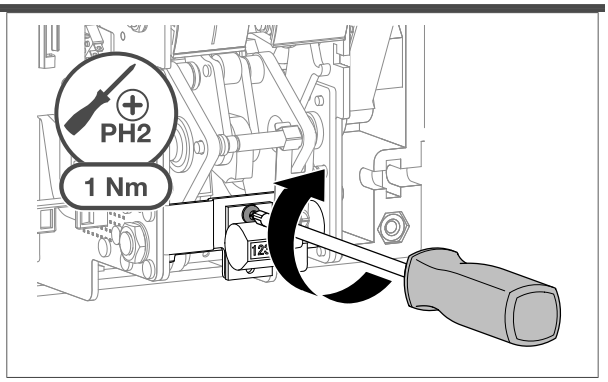
6	Position and clip on the mechanism cover.	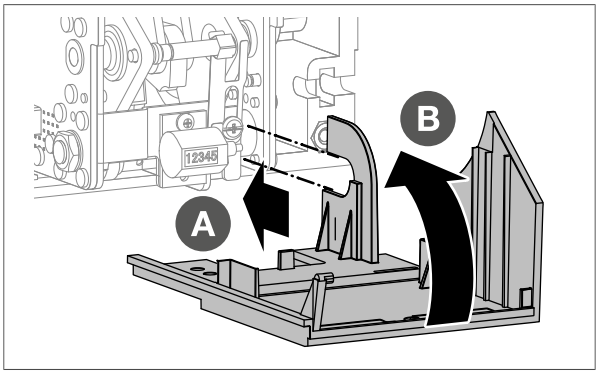 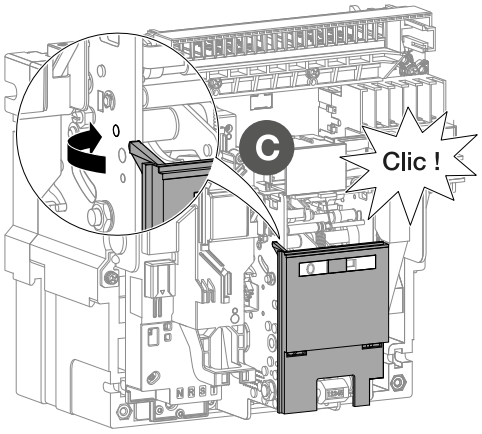
7	Refit the circuit breaker (see Chapter 6.3, Put back in place the drawout circuit breaker or see Chapter 6.6, Reassembling the fixed circuit breaker). At the end of the reassembly steps, the circuit breaker is closed.	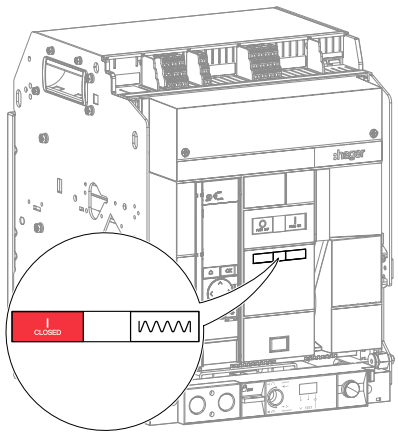

	Action	Illustration
8	If necessary, unclip the protection cover from the terminal blocks.	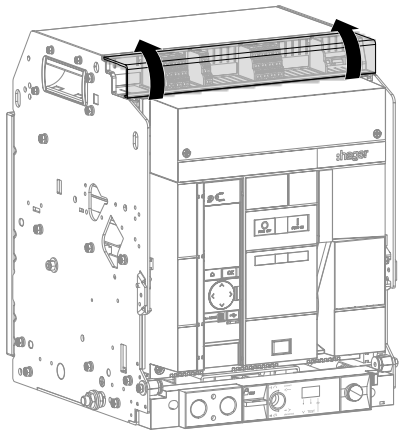
9	Cut-off the power supply of the MO spring charging motor If no charging motor is installed, go to instruction 10.	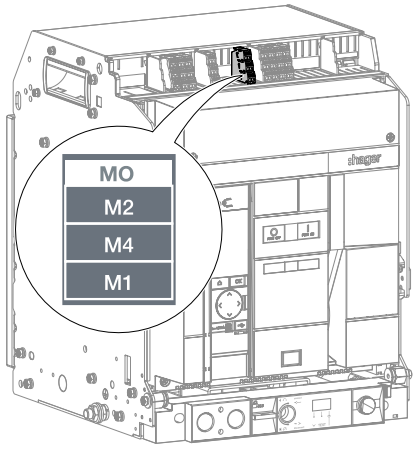
10	Open the circuit breaker by pressing the opening push button . The indicators change status.	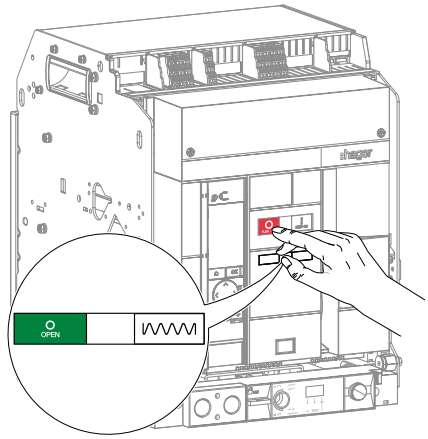

	Action	Illustration
11	Charge the closing spring using the charging handle until the following indicators appear.	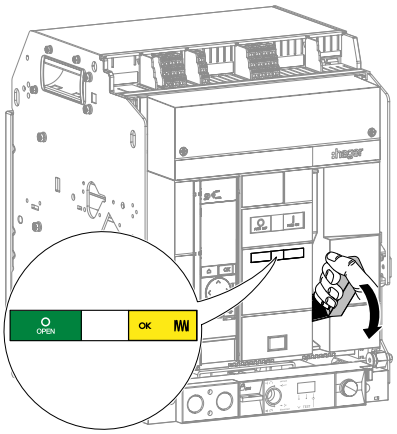
12	Close the circuit breaker by pressing the closing push button I. The indicators change status.	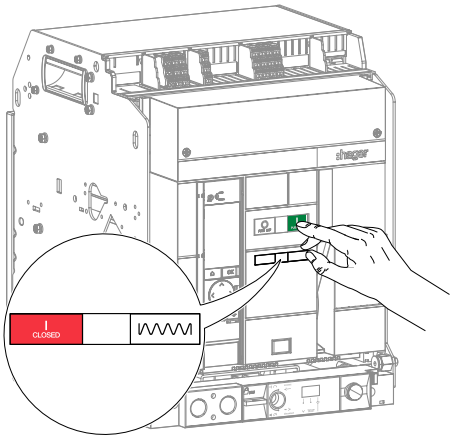
13	Open the circuit breaker by pressing the opening push button O.	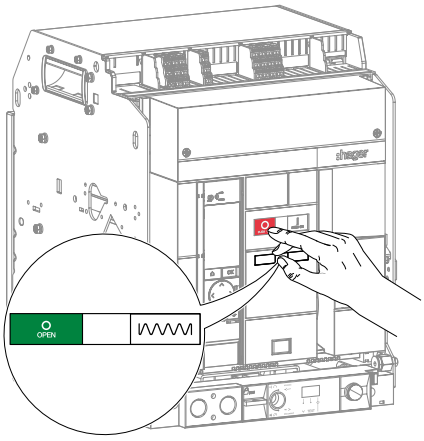

	Action	Illustration
14	Note the number shown on the CYC cycle counter.	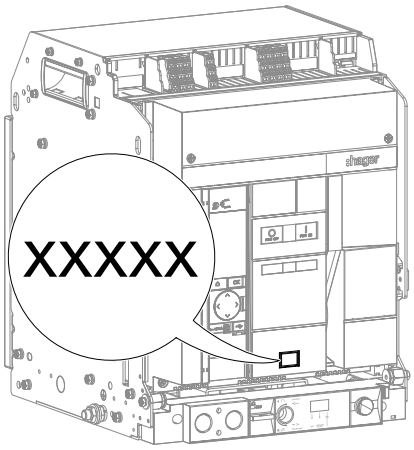
15	Charge the closing spring using the charging handle until the following indicators appear.	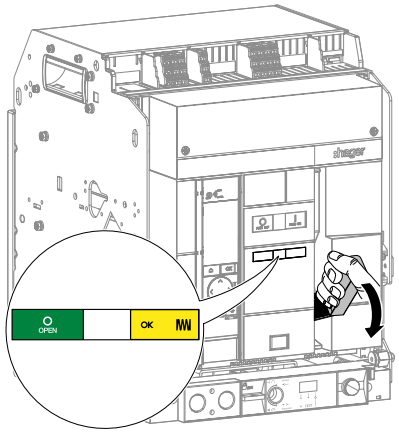
16	Check to ensure that the CYC cycle counter has incremented by 1.	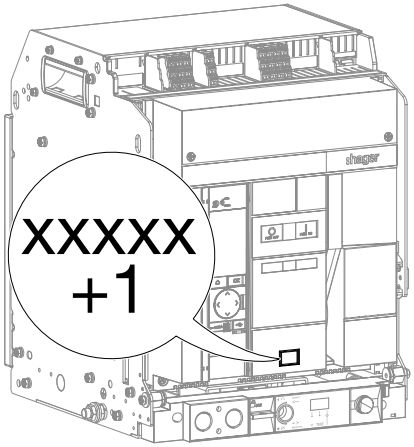

	Action	Illustration
17	Restore the power supply to the MO spring charging motor. If no charging motor is installed, go to instruction 18.	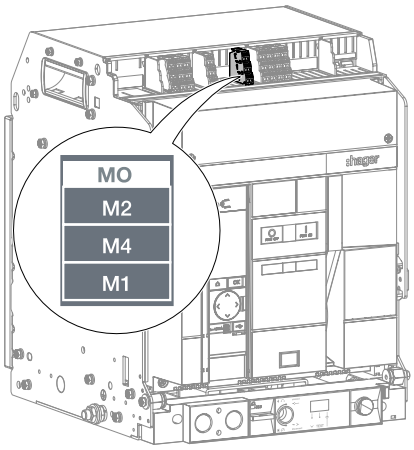
18	If necessary, put the protection cover back on the terminal block.	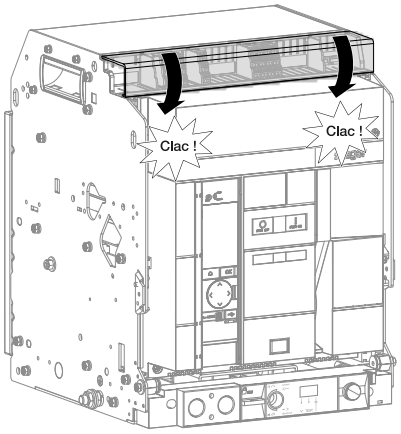

6.22 PS Position contact

For the installation of a PS position switch

Follow the installation instructions described in Manual 6LE009030A, which is provided with the product, then proceed to instructions 7 to 15 below.

For the replacement of a PS position switch

Remove the circuit breaker from its chassis first (see Chapter 6.1, Removal of the drawout circuit breaker instructions 1 to 6) then follow the instructions below:

	Action	Illustration
1	If necessary, unclip the protection cover from the terminal block.	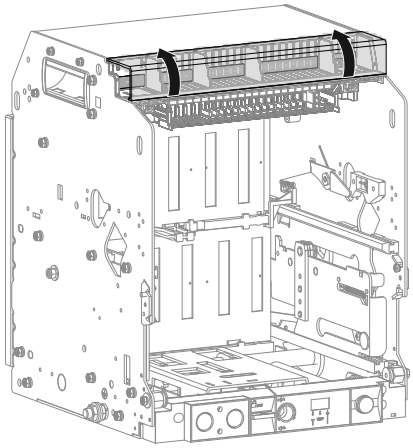
2	Remove the cables connected to the PS position contact.	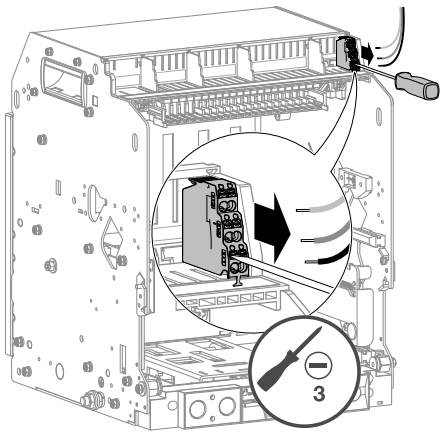
3	Unscrew the 2 screws a quarter of a turn, then remove the terminal strip.	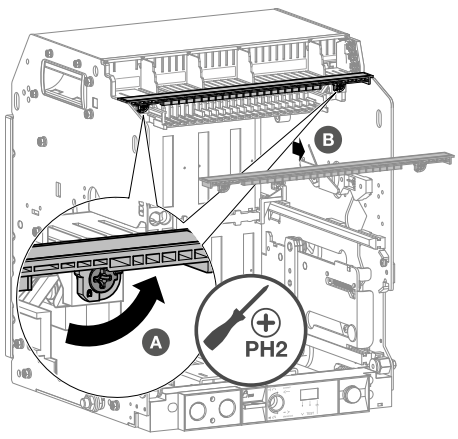

	Action	Illustration
4	Press the rear part while pulling on the PS position contact to remove it.	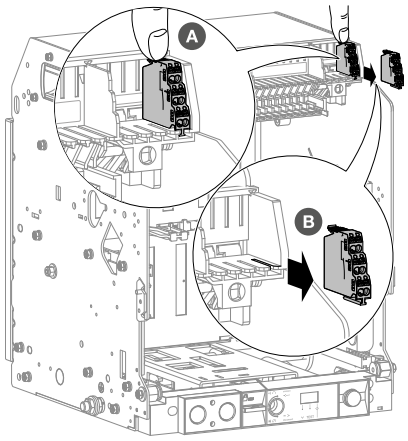
5	Replace it with a new one.	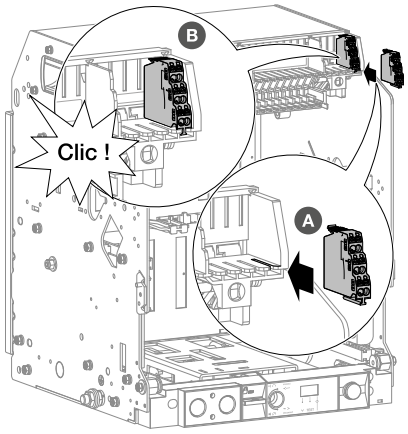
6	Refit the terminal strip, then tighten the 2 screws a quarter of a turn.	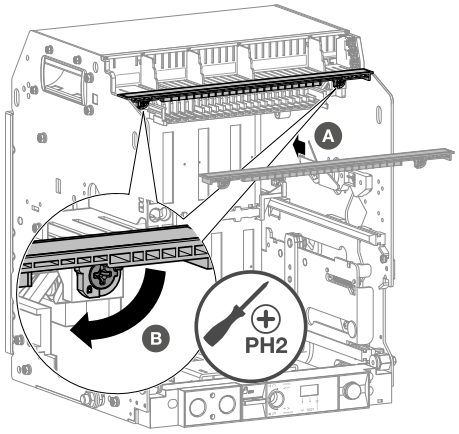

	Action	Illustration
7	Check the condition of the position contacts using an ohmmeter: **For HW2 and HW4** the continuity between the terminals: – D11 and D12 – D21 and D22 – T11 and T12 – C11 and C12 – C21 and C22 and the non-continuity between the terminals: – D11 and D14 – D21 and D24 – T11 and T14 – C11 and C14 – C21 and C24 **For HW4 only** the continuity between the terminals: – D31 and D32 – T21 and T22 – C31 and C32 and the non-continuity between the terminals: – D31 and D34 – T21 and T24 – C31 and C34	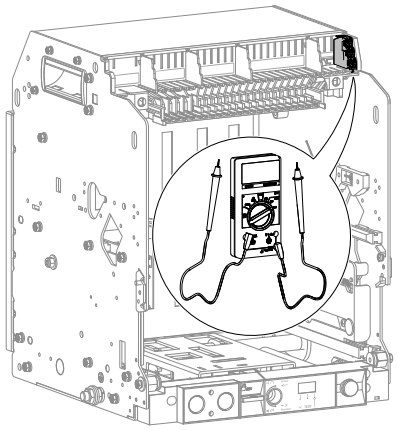

HW2

D1	D2	T1	C1	C2
D12	D22	T12	C12	C22
D14	D24	T14	C14	C24
D11	D21	T11	C11	C21

HW4

D1	D2	D3	T1	T2	C1	C2	C3
D12	D22	D32	T12	T22	C12	C22	C32
D14	D24	D34	T14	T24	C14	C24	C34
D11	D21	D31	T11	T21	C11	C21	C31

HW2

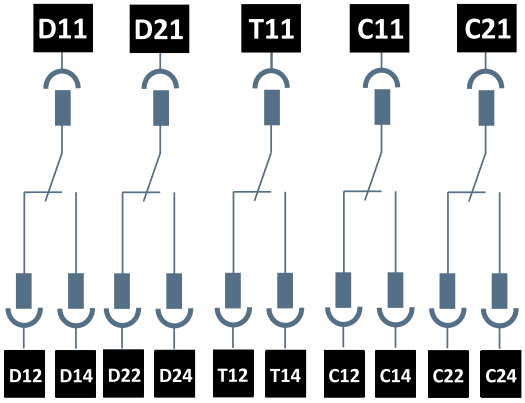

HW4

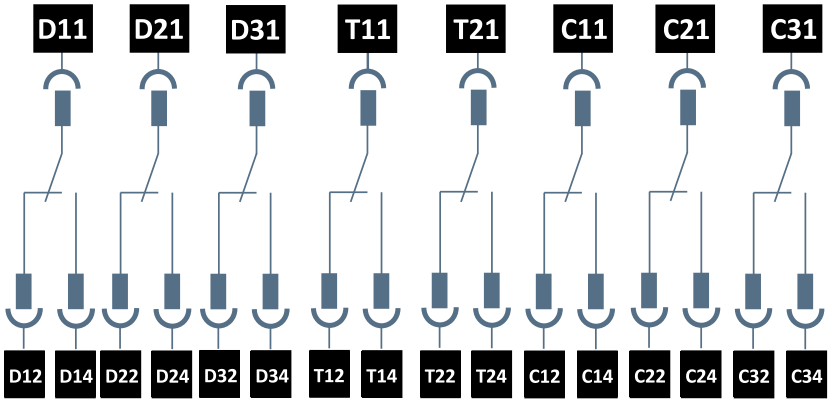

	Action	Illustration
8	Place the circuit breaker in the Disconnected position (see Chapter 6.3, Put back in place the drawout circuit breaker instructions 11 to 16).	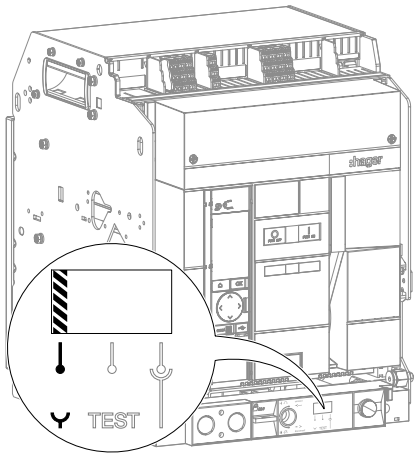
9	Check the condition of the position contacts using an ohmmeter: **For HW2 and HW4** the continuity between the terminals: – D11 and D14 – D21 and D24 – T11 and T12 – C11 and C12 – C21 and C22 and the non-continuity between the terminals: – D11 and D12 – D21 and D22 – T11 and T14 – C11 and C14 – C21 and C24 **For HW4only** the continuity between the terminals: – D31 and D34 – T21 and T22 – C31 and C32 and the non-continuity between the terminals: – D31 and D32 – T21 and T24 – C31 and C34	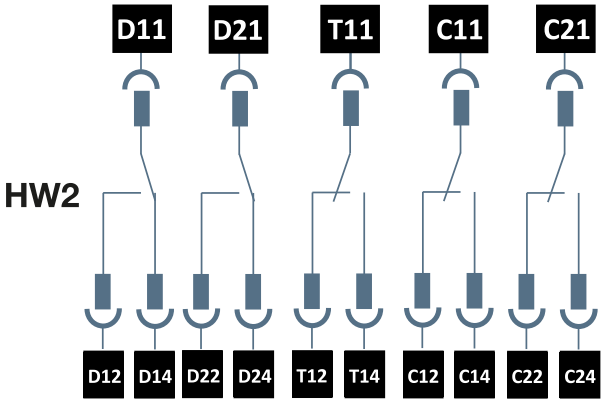 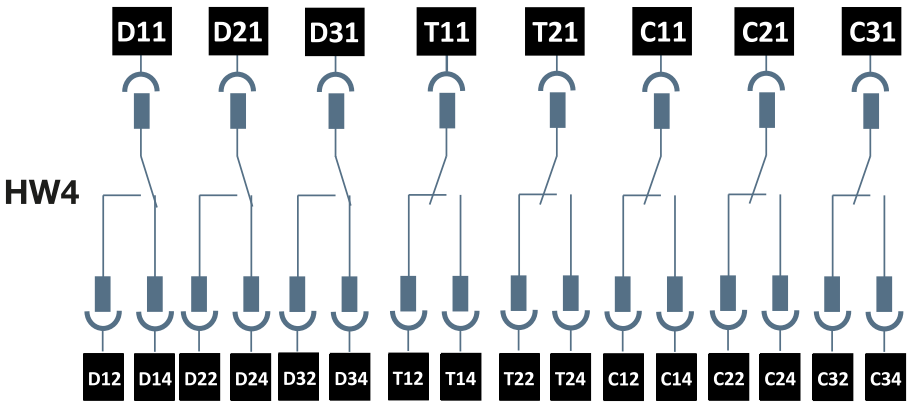

	Action	Illustration
10	Put the circuit breaker in the Test position.	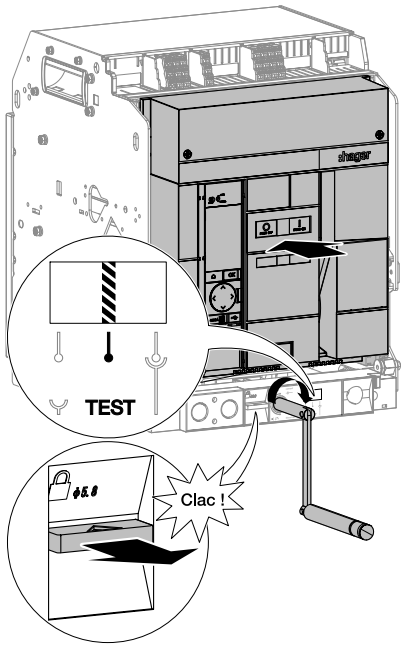
11	Check the condition of the position contacts using an ohmmeter: **For HW2 and HW4** the continuity between the terminals: – D11 and D12 – D21 and D22 – T11 and T14 – C11 and C12 – C21 and C22 and the non-continuity between the terminals: – D11 and D14 – D21 and D24 – T11 and T12 – C11 and C14 – C21 and C24 **For HW4 only** the continuity between the terminals: – D31 and D32 – T21 and T24 – C31 and C32 and the non-continuity between the terminals:	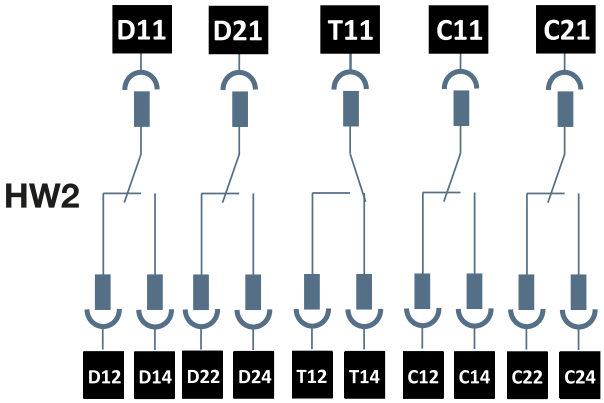 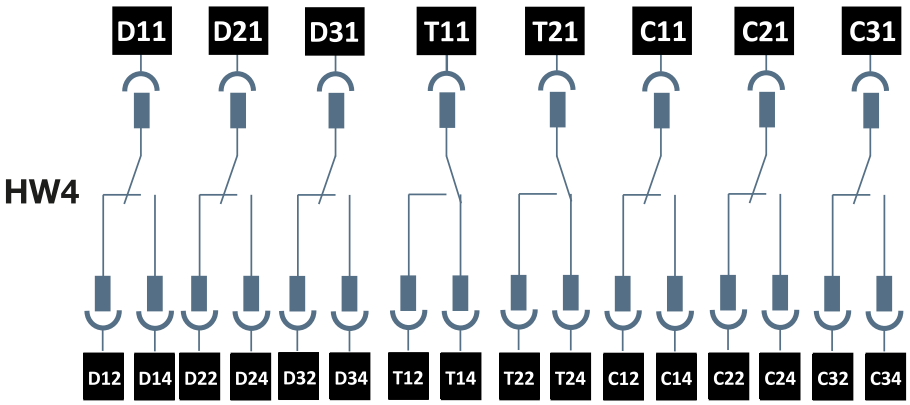

	Action	Illustration
	– D31 and D34 – T21 and T22 – C31 and C34	
12	Put the circuit breaker in the Connected position.	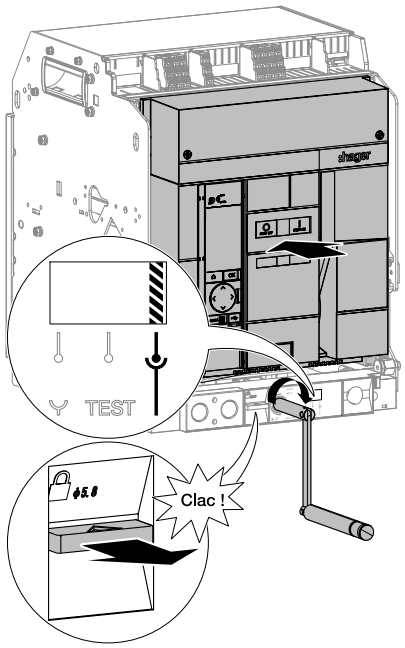
13	Check the condition of the position contacts using an ohmmeter: **For HW2 and HW4** the continuity between the terminals: – D11 and D12 – D21 and D22 – T11 and T12 – C11 and C14 – C21 and C24 and the non-continuity between the terminals: – D11 and D14 – D21 and D24 – T11 and T14 – C11 and C12 – C21 and C22 **For HW4 only** the continuity between the terminals:	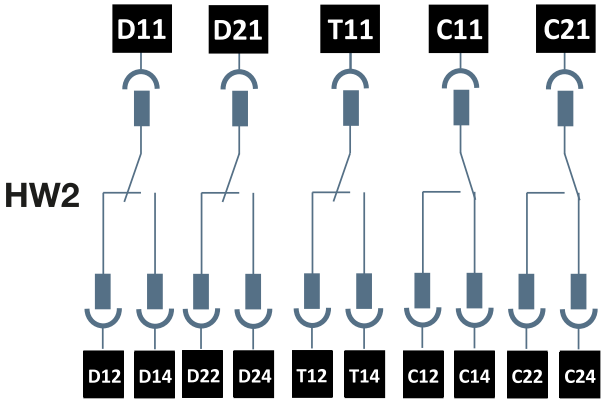 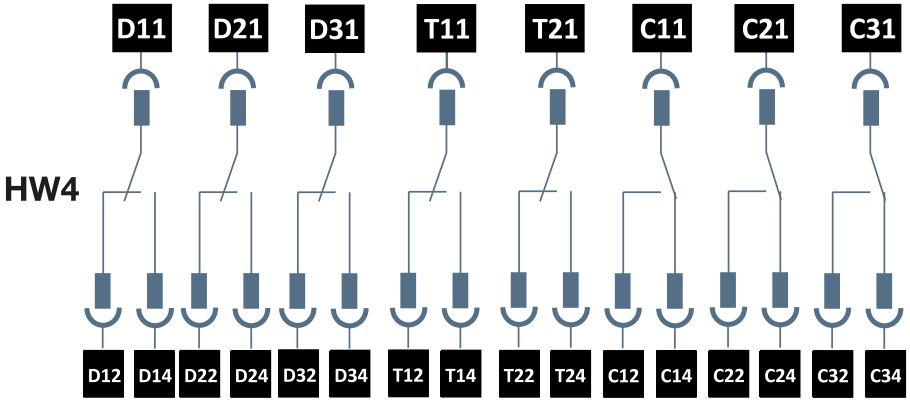

	Action	Illustration
	– D31 and D32 – T21 and T22 – C31 and C34 and the non-continuity between the terminals: – D31 and D34 – T21 and T24 – C31 and C32	

	Action	Illustration
14	Replace the cables originally connected to the PS position contact.	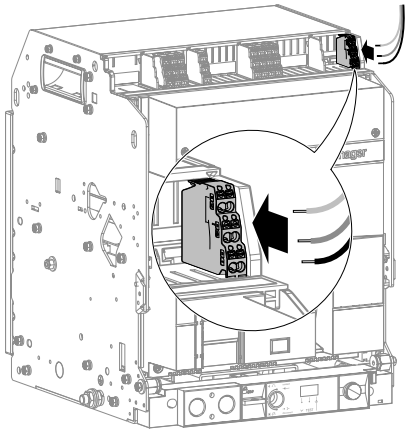
15	If necessary, put the protection cover back on the terminal block,	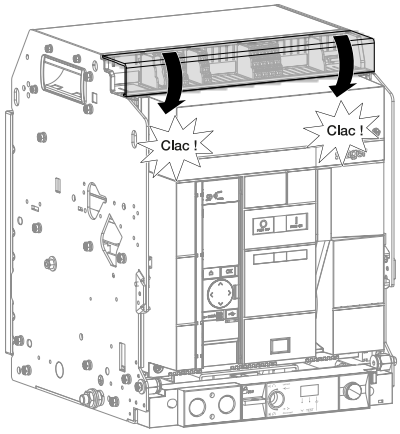

WHAT TO DO

In the event of a malfunction, refer to the Troubleshooting Guide 6LE009769A.

6.23 PBC Push-button cover

For the installation of a PBC push button cover
follow the installation instructions described in Manual 6LE007871A, which is provided with the product, then proceed to instructions 4 to 5 below.

To replace a PBC push button cover
First remove the front cover (see Chapter 6.34, Front cover instructions 1 to 6 or see Chapter 6.4, Disassembling the fixed circuit breaker) and then follow the instructions below:

	Action	Illustration
1	Turn the cover over, remove the 2 screws, then the cover of the PBC push buttons.	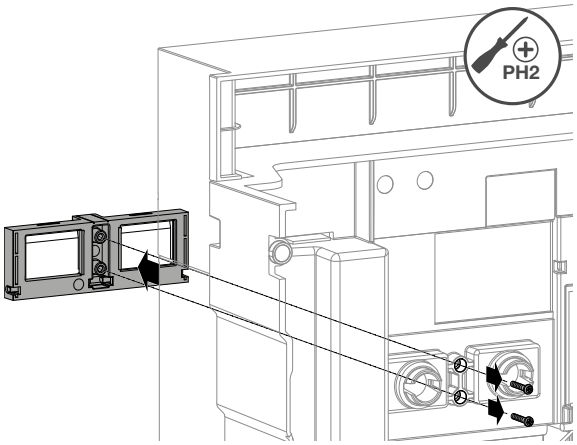
2	Replace it with a new one, then tighten the 2 screws.	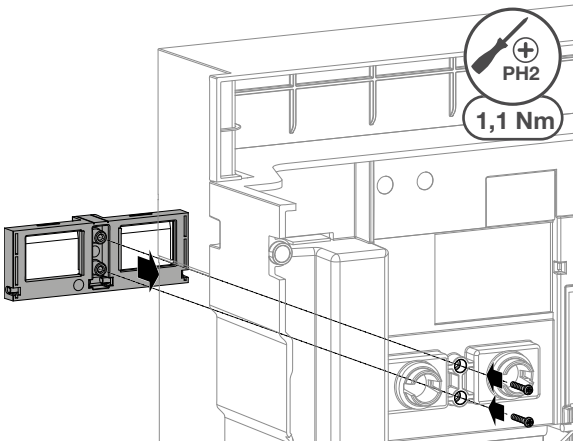
3	Refit the front cover (see Chapter 6.34, Front cover instructions 7 to 14 or see Chapter 6.6, Reassembling the fixed circuit breaker). When the re-installation steps are complete, the circuit breaker is closed.	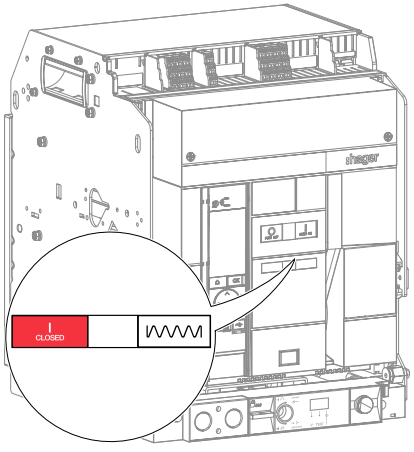

	Action	Illustration
4	Install the PBC push button cover in the desired position. PBC push button on the side held down.	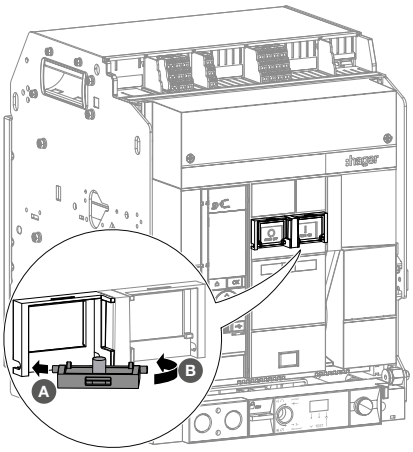
	Access to the opening push button blocked.	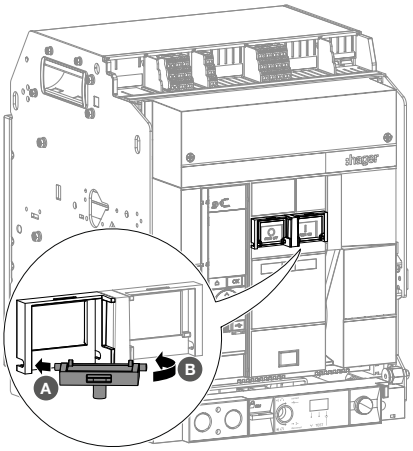
	Access to the closing push button blocked.	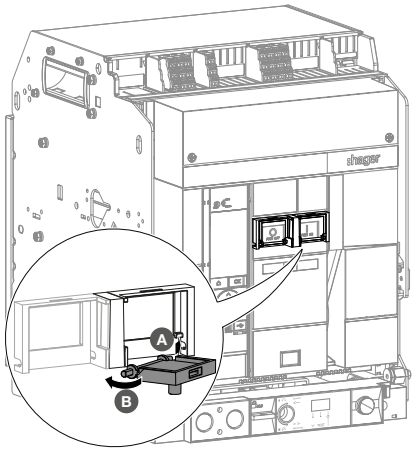

	Action	Illustration
5	Fold down the PBC push buttons according to the position you want to lock. **Case 1** The opening push button is pressed continuously and the closing push button is blocked. **Case 2** The opening and closing push buttons are blocked.	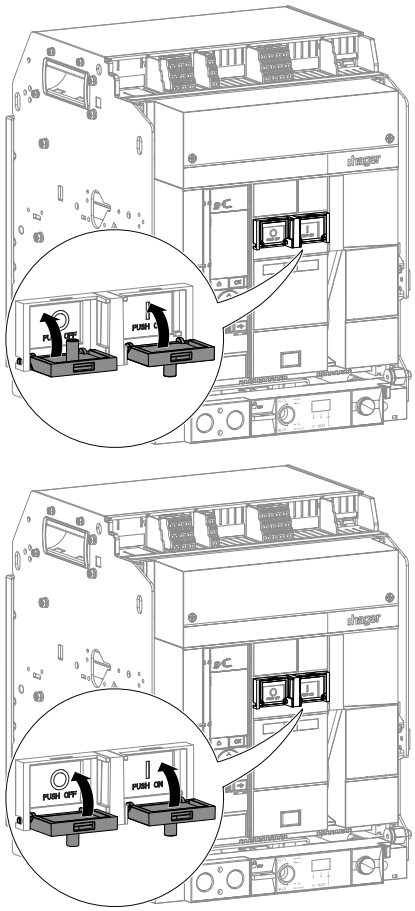
6	Lock it using one or more padlocks.	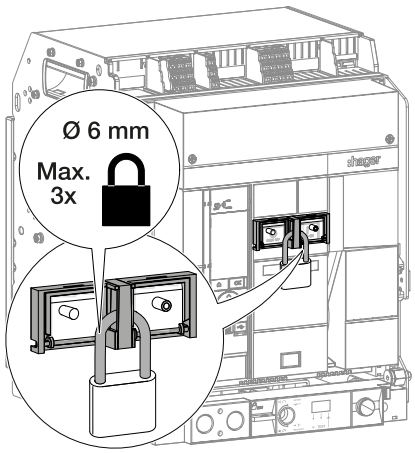

Information

It is not possible to hold down the closing push button with this accessory.

6.24 RI open-door racking interlock accessory

For the installation of an RI open-door racking-in lock accessory

Follow the installation instructions described in Manual 6LE007874A, which is provided with the product, then proceed to instructions 3 to 6 below.

For the replacement of an RI open-door racking-in locking accessory

Follow the instructions below:

	Action	Illustration
1	Remove the RI open-door racking interlock accessory by pulling on it strongly.	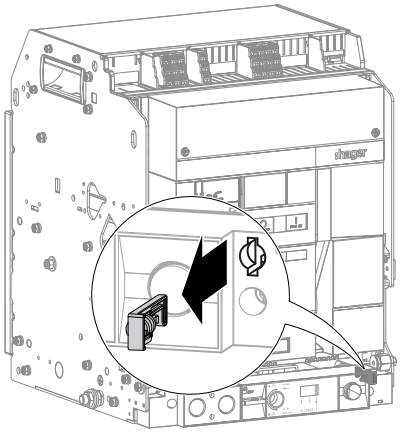
2	Replace it with a new one.	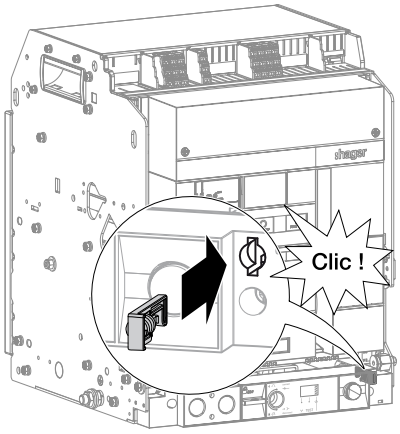
3	Test the RI open-door racking interlock accessory. Open the electrical cabinet door.	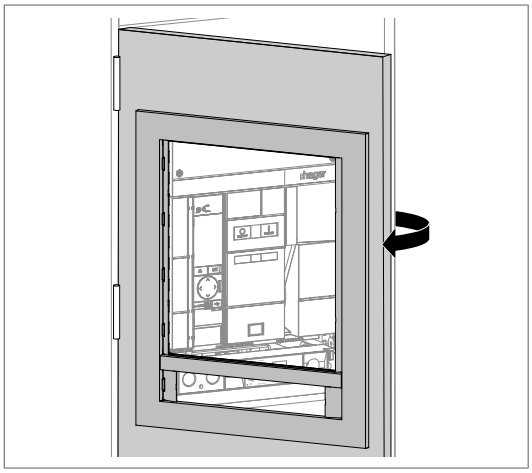

	Action	Illustration
4	Check to ensure that it is not possible to insert the racking handle into the racking-in/racking-out hole.	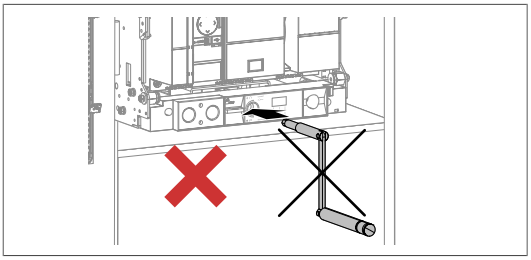
5	Close the electrical cabinet door again.	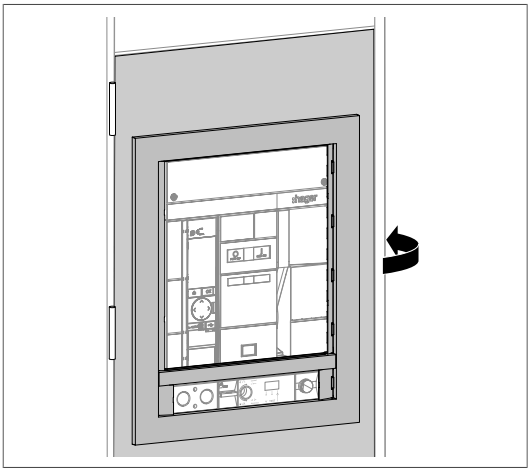
6	Check that it is now possible to insert the racking handle into the racking-in/racking-out hole.	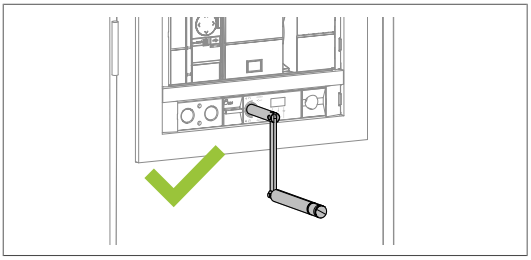

WHAT TO DO

In the event of a malfunction, check the setting and, in particular, the dimension between the RI open-door racking interlock accessory and the door of the electrical cabinet.

6.25 Accessory for locking the circuit breaker in OFF by OLK keylock

To install an OLK key lock accessory for locking the circuit breaker in OFF
follow the installation instructions described in the instructions 6LE007875A supplied with the product and then proceed to instructions 6 to 16 below.

To replace an OLK keylock accessory for locking the circuit breaker in OFF
Remove the circuit breaker beforehand (see Chapter 6.1, Removal of the drawout circuit breaker or see Chapter 6.4, Disassembling the fixed circuit breaker) then follow the instructions below:

	Action	Illustration
1	Remove the screw, then the adaptor of the OLK key lock.	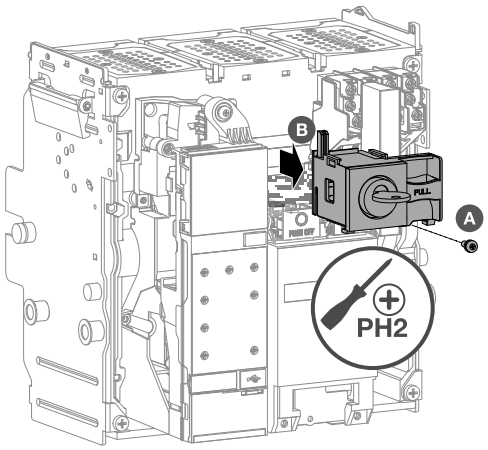
2	Install the new OLK key lock in its adaptor.	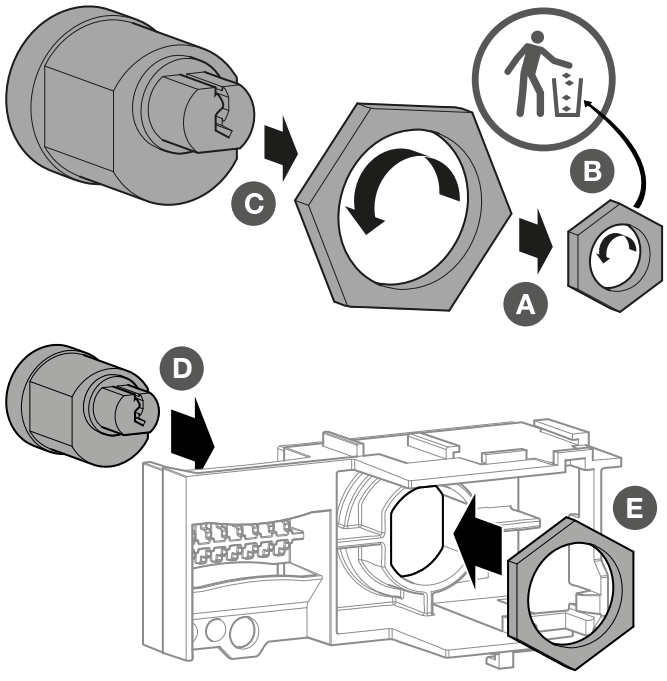

	Action	Illustration
		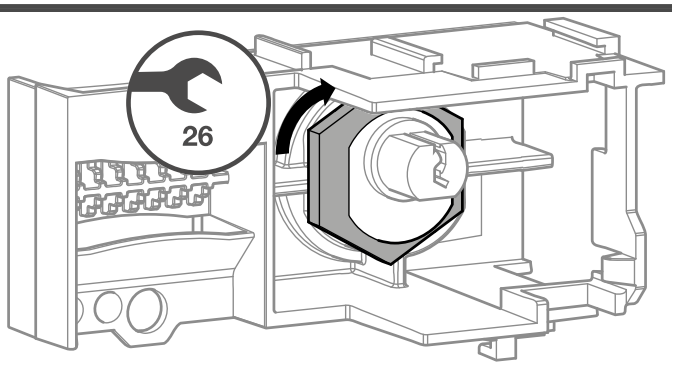
3	a) Turn the lock by 90°. b) Insert the adapter. c) Tighten it to the lock cylinder using the screw provided.	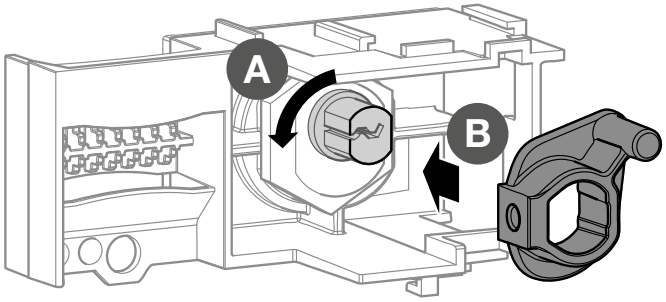 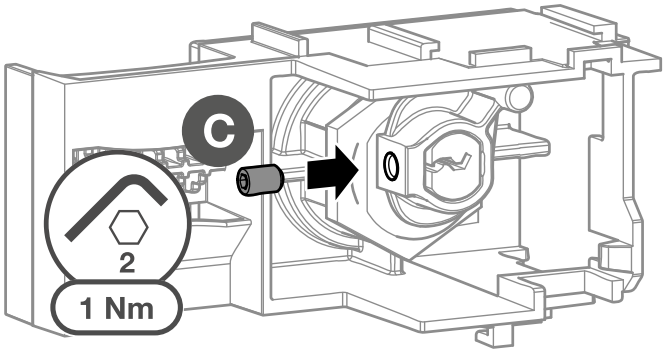
4	Install the locking tab.	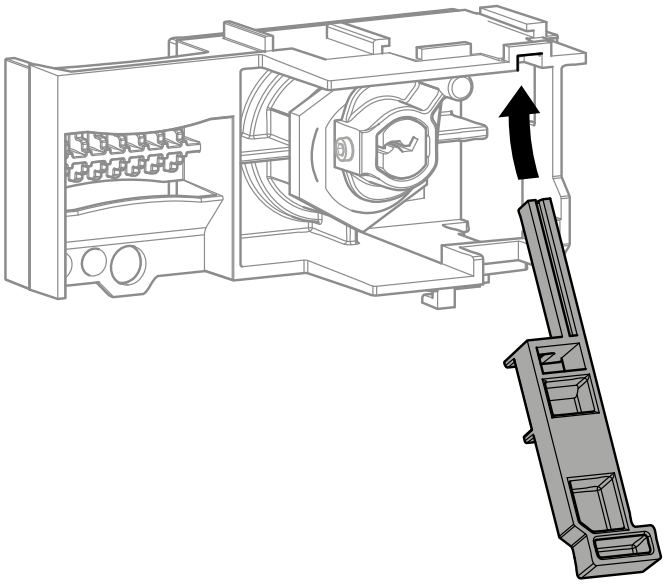

	Action	Illustration
	Be careful to position the adapter cylinder in the space defined by the 2 ribs of the tab.	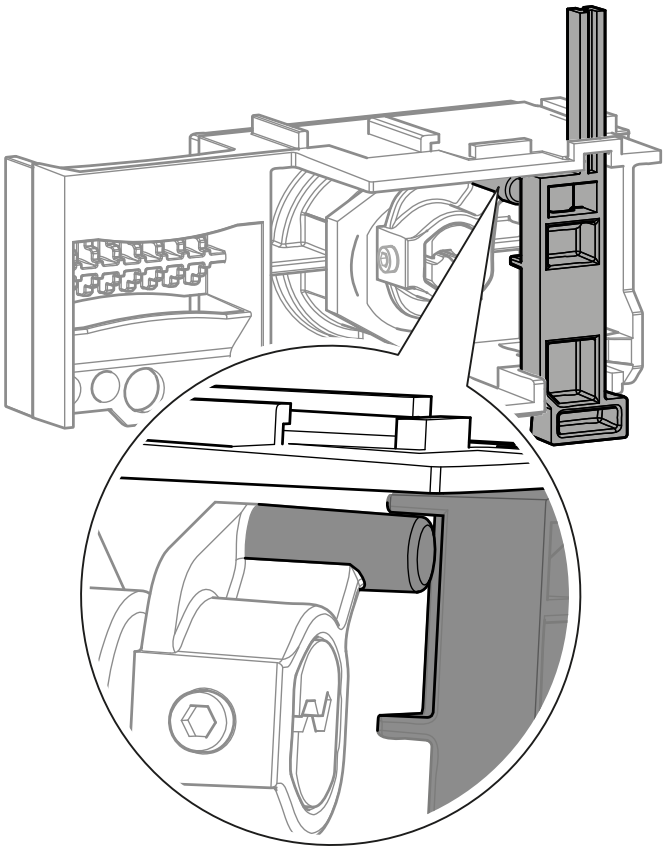
5	Install, then screw the adaptor of the OLK key lock.	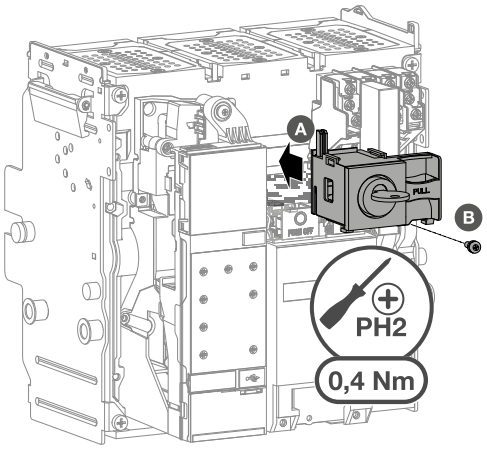

	Action	Illustration
6	Refit the circuit breaker (see Chapter 6.3, Put back in place the drawout circuit breaker or see Chapter 6.6, Reassembling the fixed circuit breaker). When the re-installation steps are complete, the circuit breaker is closed.	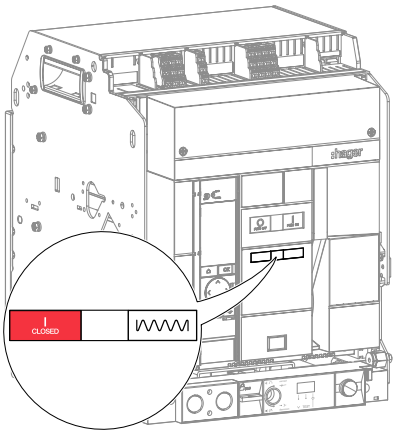
7	Test the circuit breaker locking accessory in off position by OLK key lock. Check that the key is in the horizontal position.	
8	Open the circuit breaker by pressing the opening push button .	
9	While pressing down the opening push button , put the key back into the vertical position by turning it counter-clockwise.	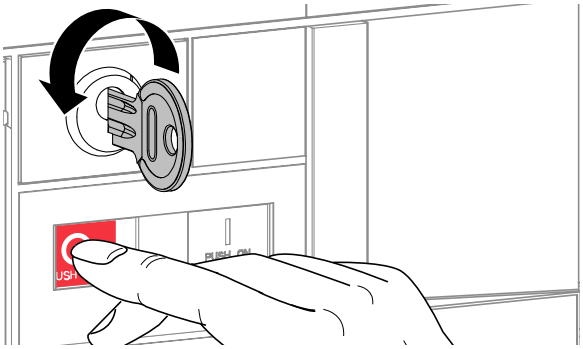

	Action	Illustration
10	Remove the key.	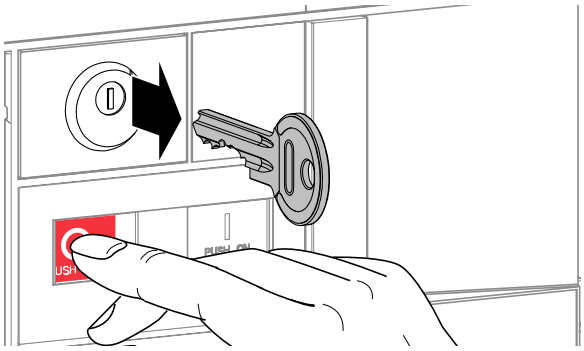
11	Then release the press on the opening push button .It returns to its initial position.	
12	Charge the closing spring using the charging handle until the following indicators appear.	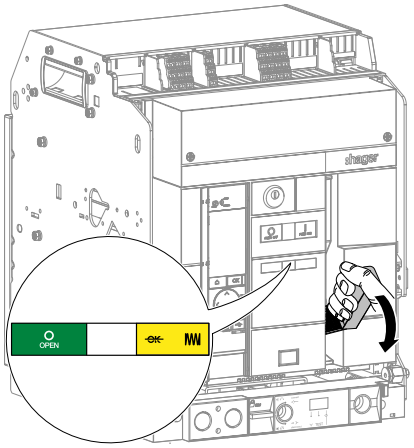
13	Check that it is no longer possible to close the circuit breaker by pressing the closing push button .	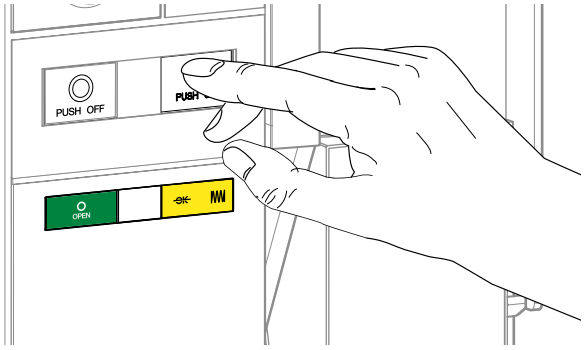

	Action	Illustration
14	To unlock the device, insert the key into the lock.	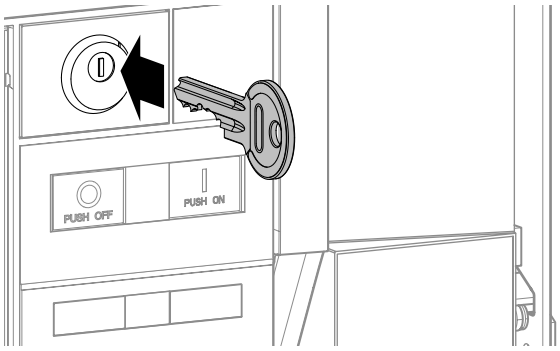
15	Turn the key clockwise.	
16	Check that it is now possible to close the circuit breaker by pressing the closing push button .	

Information

The key remains locked in the lock. To remove it, follow instructions 7 to 10.

6.26 OLP Accessory for locking the circuit breaker in OFF by padlock

To install an OLP padlock accessory for locking the circuit breaker in OFF

Follow the installation instructions described in the manual 6LE007876A, which is supplied with the product, and then proceed to instructions 5 to 12 below.

To replace an OLP padlock accessory for locking the circuit breaker in OFF

Remove the circuit breaker beforehand (see Chapter 6.1, Removal of the drawout circuit breaker or see Chapter 6.4, Disassembling the fixed circuit breaker) and then follow the instructions below:

	Action	Illustration
1	Remove the screw.	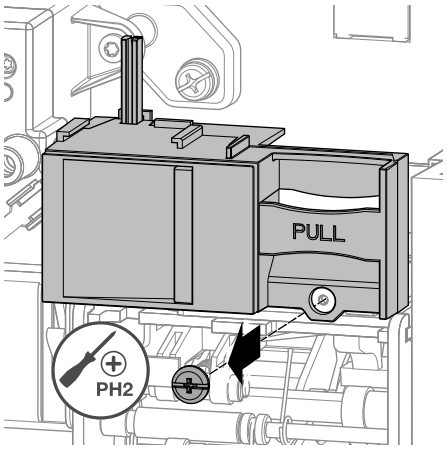
2	Then the circuit breaker locking accessory.	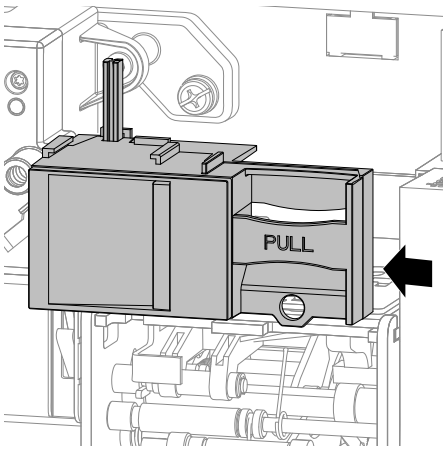

	Action	Illustration
3	Replace it with a new one.	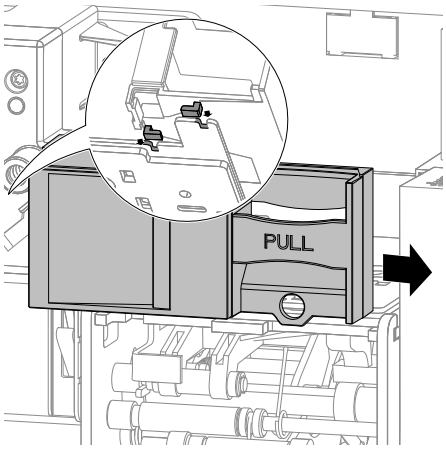
4	Then tighten the screw.	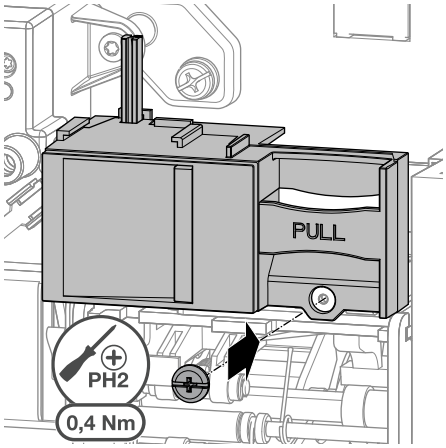
5	Refit the circuit breaker (see Chapter 6.3, Put back in place the drawout circuit breaker or see Chapter 6.6, Reassembling the fixed circuit breaker). When the re-installation steps are complete, the circuit breaker is closed.	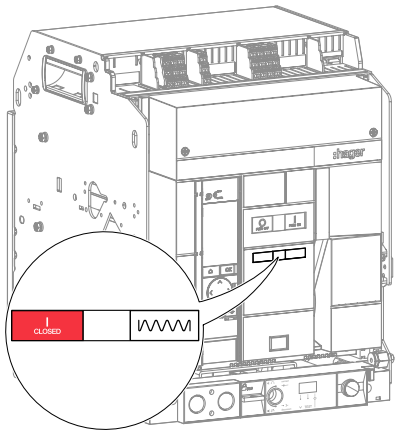
6	Test the circuit breaker locking accessory in OFF with an OLP padlock. Press the opening push button, the circuit breaker opens and, while holding down the push button, pull the tab of the locking device.	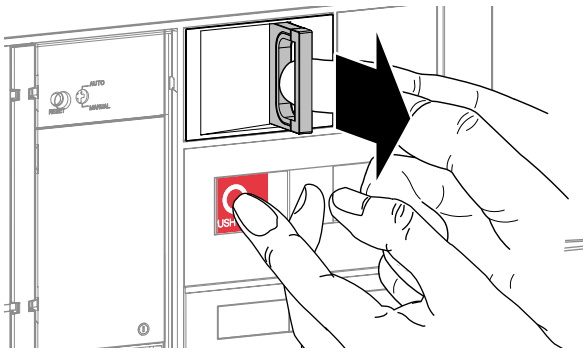

	Action	Illustration
7	Release the opening push button while keeping the tab pressed. The opening push button returns to its initial position. First position, then close the padlock (Up to three Ø 5–8 mm padlocks can be installed).	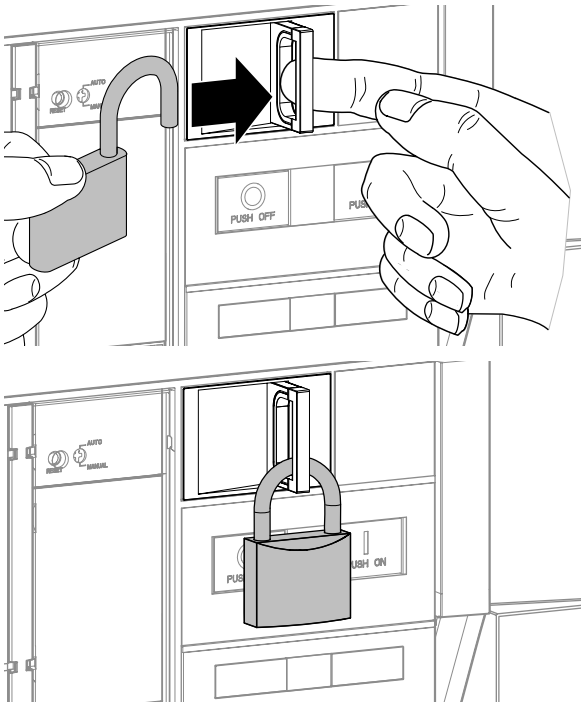
8	Charge the closing spring using the charging handle until the following indicators appear.	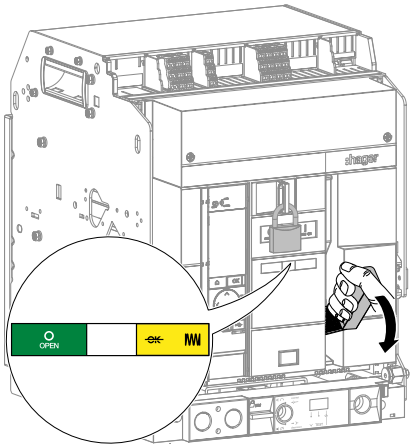
9	Check that it is no longer possible to close the circuit breaker by pressing the closing push button .	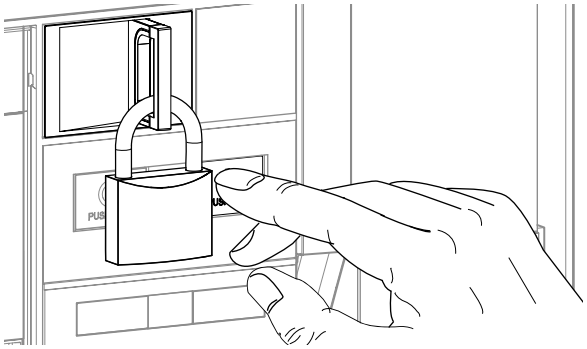

	Action	Illustration
10	To unlock the device, remove the padlock.	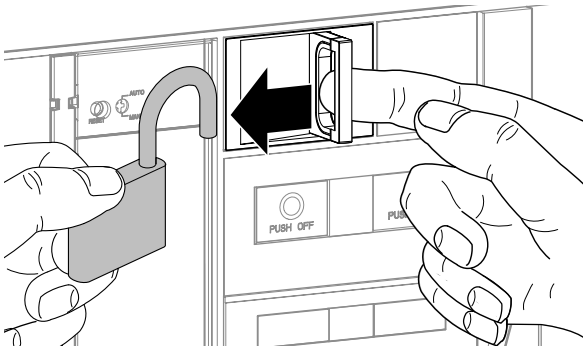
11	Check that the tab returns to its initial position.	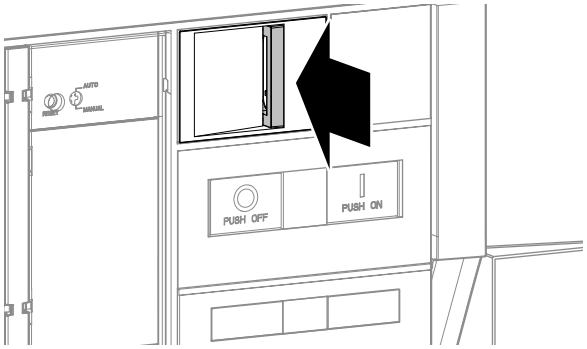
12	Check that it is now possible to close the circuit breaker by pressing the closing push button I.	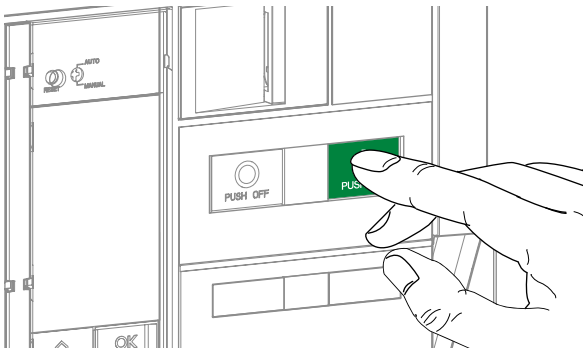

6.27 CL position-locking accessory to lock the circuit breaker in its chassis

For installation of a CL position-locking accessory on a circuit breaker in its chassis
Follow the installation instructions described in the instruction manual 6LE007877A shipped with the product and then proceed to instructions 5 to 10 below.

To replace a CL position-locking accessory of the circuit breaker in its chassis
First remove the circuit breaker (see Chapter 6.1, Removal of the drawout circuit breaker or see Chapter 6.4, Disassembling the fixed circuit breaker) and then follow the instructions below:

	Action	Illustration
1	Remove the screws then the CL position-locking accessory holding the circuit breaker in its chassis.	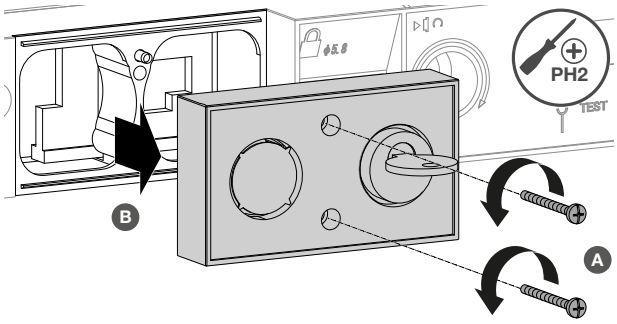
2	Disassemble the used lock, then replace it with a new one.	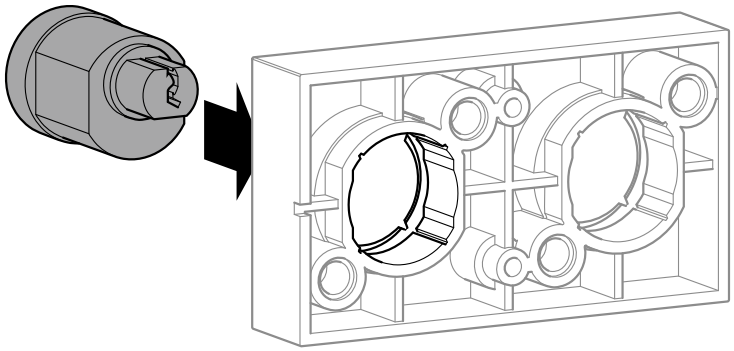 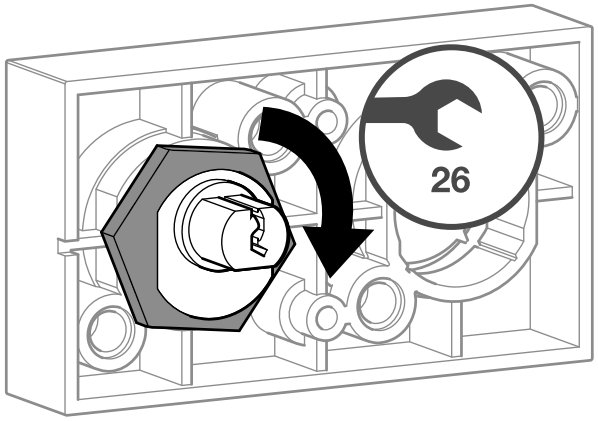

	Action	Illustration
	Rotate the lock 90°. Insert the adapter and tighten it to the lock cylinder using the screw provided.	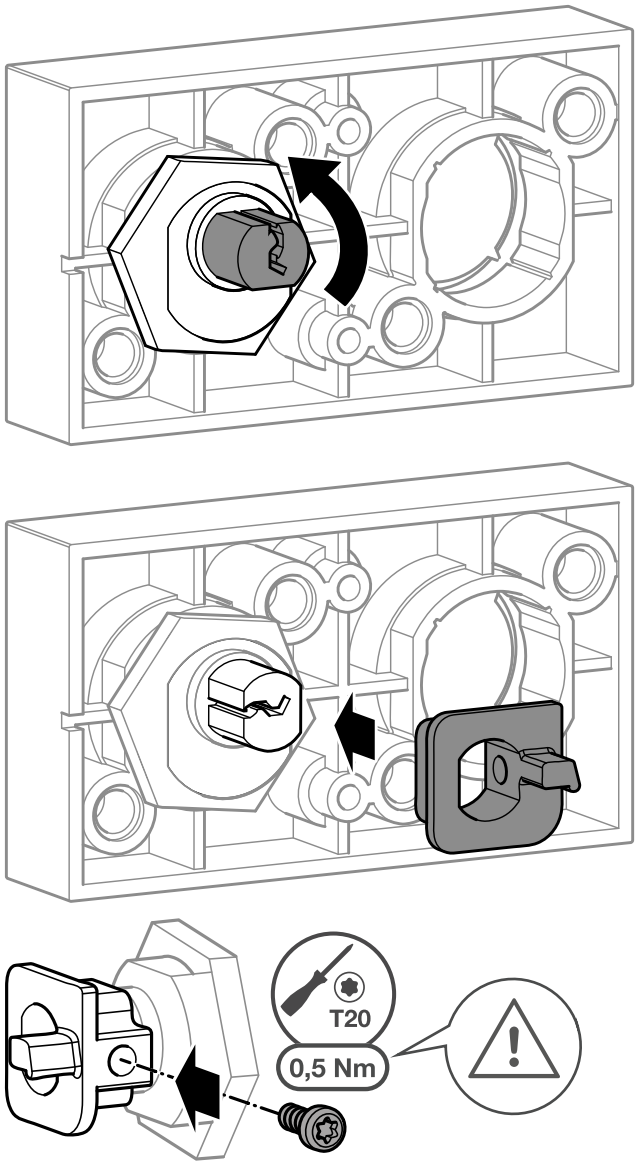
3	Refit then tighten the screw of CL position-locking accessory holding the circuit breaker in its chassis.	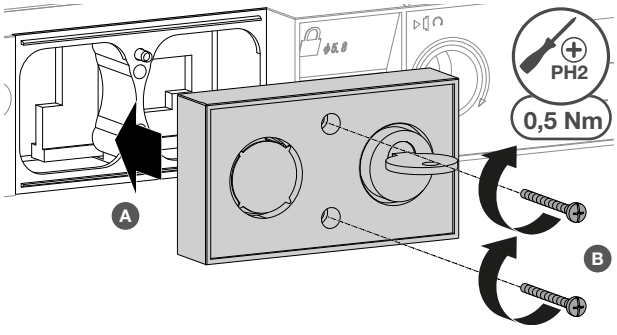

	Action	Illustration
4	Refit the circuit breaker (see Chapter 6.3, Put back in place the drawout circuit breaker or see Chapter 6.6, Reassembling the fixed circuit breaker). When the re-installation steps are complete, the circuit breaker is closed.	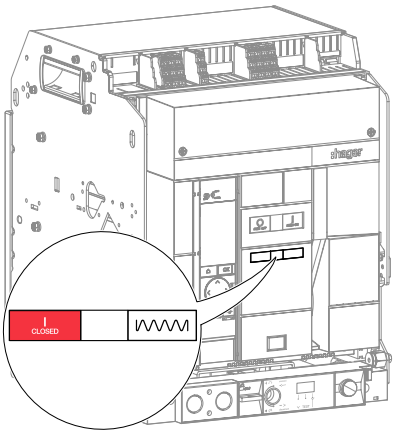

Information

Identify the type of chassis using the label on the side of the circuit breaker and the chassis.

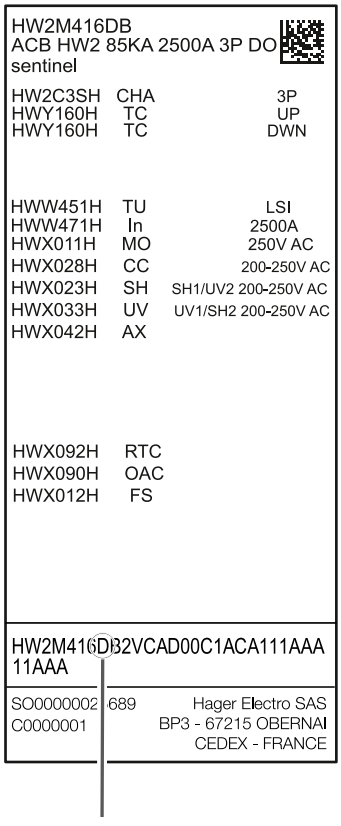

- With a chassis of type D, perform the following test, circuit breaker in the 3 positions: Connected, Test and Disconnected.
- With a chassis of type L, perform the following test, circuit breaker in the Disconnected position only.

	Action	Illustration
5	Test the CL position-locking accessory holding the circuit breaker in its chassis. Lock without key or with key in vertical position in the lock.	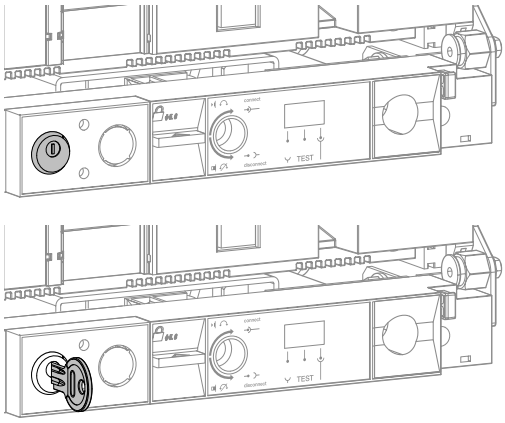
6	Check to ensure that it is not possible to insert the racking handle into the racking-in/racking-out hole.	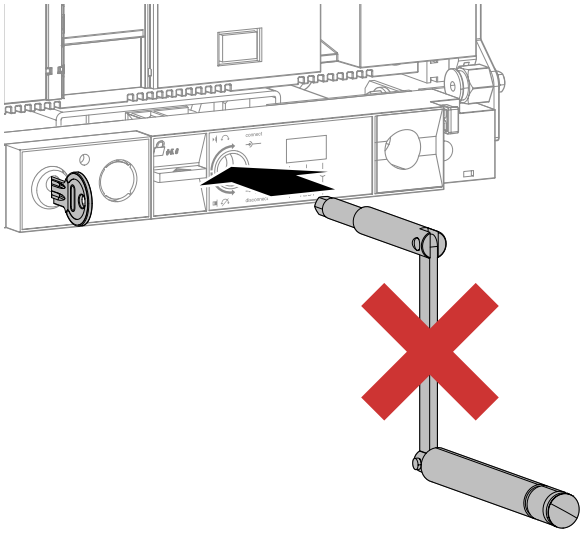

Information

If 2 locks are installed, only one key in the vertical position prevents the introduction of the racking handle into the place to insert/withdraw.

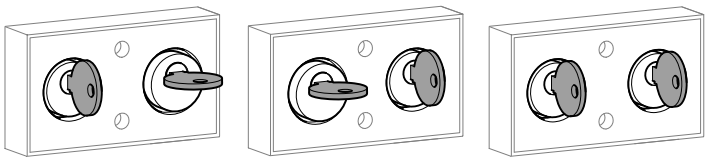

7	To unlock the device, insert the key into the lock.	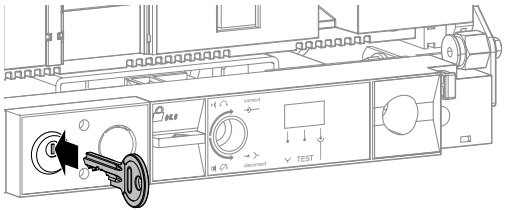

	Action	Illustration
8	Verify that the racking handle is not already inserted in the racking-in/racking-out hole, then turn the key of the locking device clockwise to put it in the horizontal position.	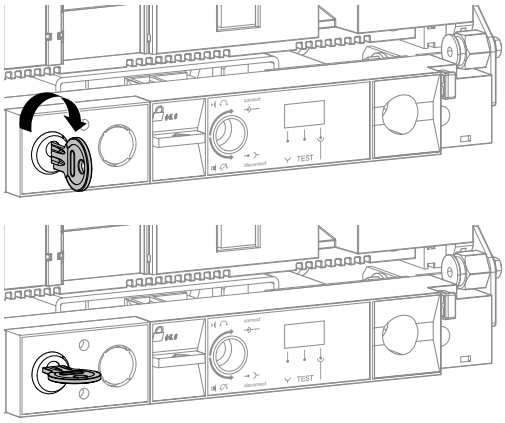
9	Check that it is now possible to insert the racking handle into the racking-in/racking-out hole.	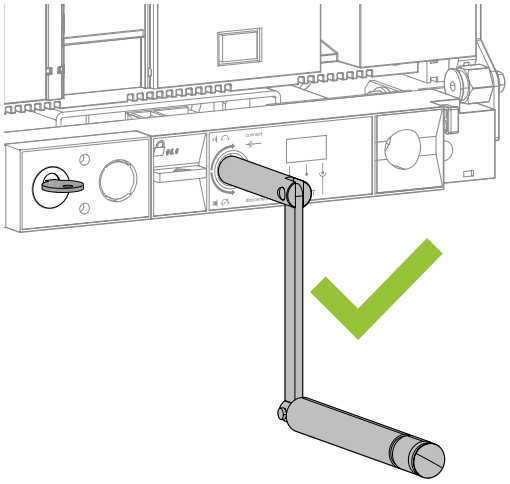

Information

If 2 locks are installed, both keys must be in the horizontal position to allow the introduction of the racking handle into the racking-in/racking-out hole.

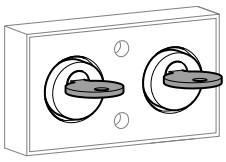

10	Remove the racking handle from the racking-in/racking-out hole. The key remains locked in the lock. To remove it, turn the key anti-clockwise to put it in the vertical position.	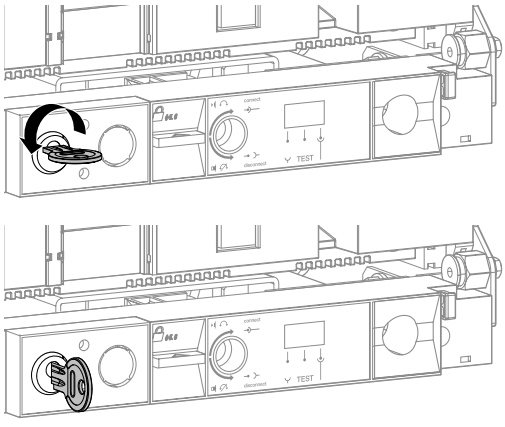

	Action	Illustration
		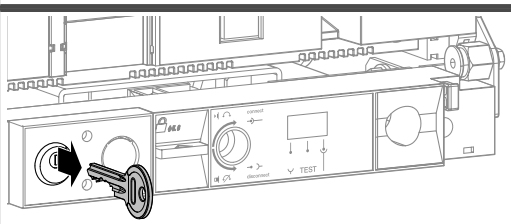

6.28 WIP wrong-insertion preventer for drawout circuit breaker

For the installation of a WIP wrong insertion preventer for a drawout circuit breaker

Follow the installation instructions described in the 6LE0078784A manual provided with the product. Then proceed to instructions 6 and 7 below.

For the replacement of WIP Wrong insertion preventer for a drawout circuit breaker chassis

First remove the circuit breaker from its chassis (see Chapter 6.1, Removal of the drawout circuit breaker , instructions 1 to 8) then follow the instructions below:

	Action	Illustration
1	Unscrew then remove the WIP wrong insertion preventer that is to be replaced.	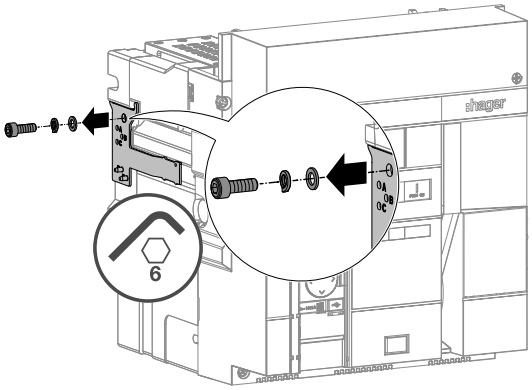
2	Position the studs identically on the new WIP wrong insertion preventer.	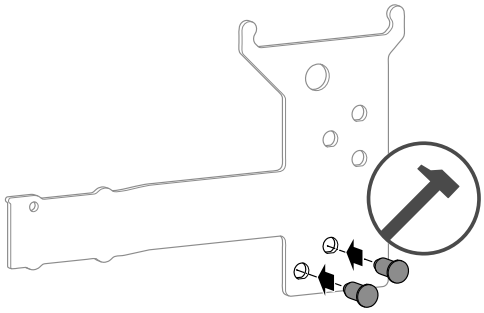
3	Screw the WIP wrong insertion preventer back on.	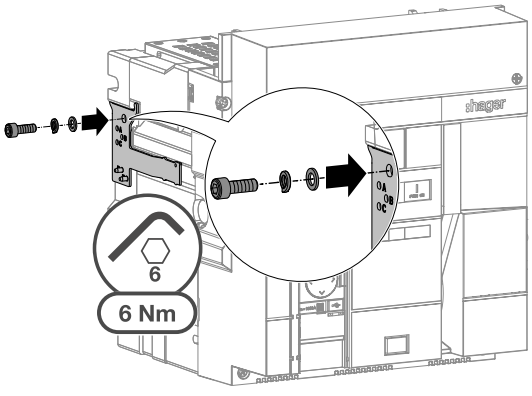

	Action	Illustration
4	Replace the keying screws on the chassis if necessary.	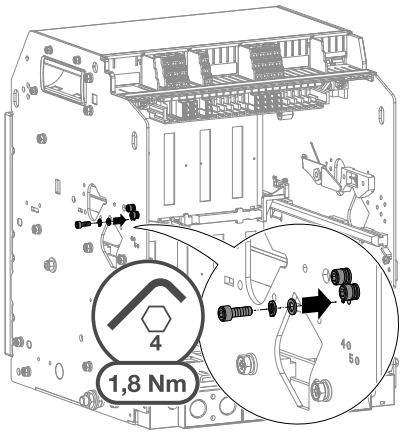
5	Check to ensure that the combination on the chassis matches the combination on the circuit breaker. **Chassis** / **Air circuit breaker** 123 DE 124 CE 125 CD 134 BE 135 BD 145 BC 234 AE 235 AD 245 AC 345 AB Example with the combinations 123 and DE. **Chassis** / **Air circuit breaker** 123 DE	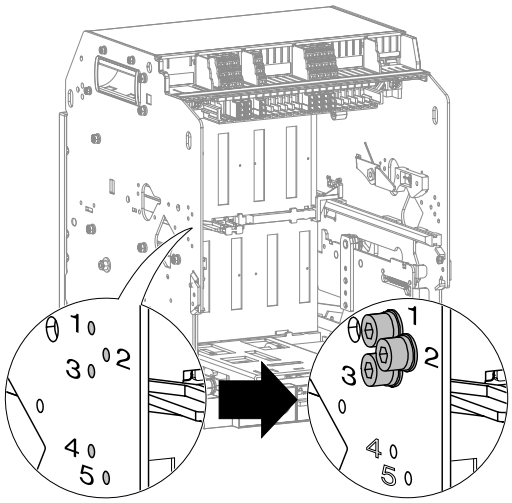 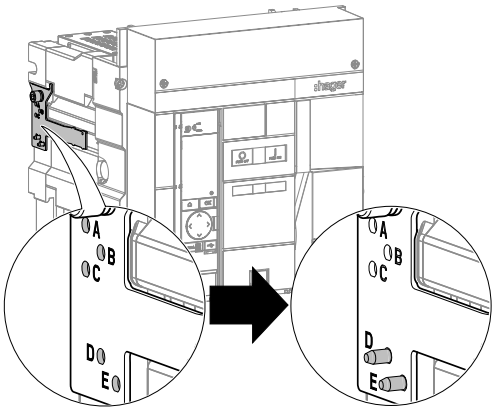

	Action	Illustration
6	Perform a complete rack-in/rack-out operation for each circuit breaker in the installation.	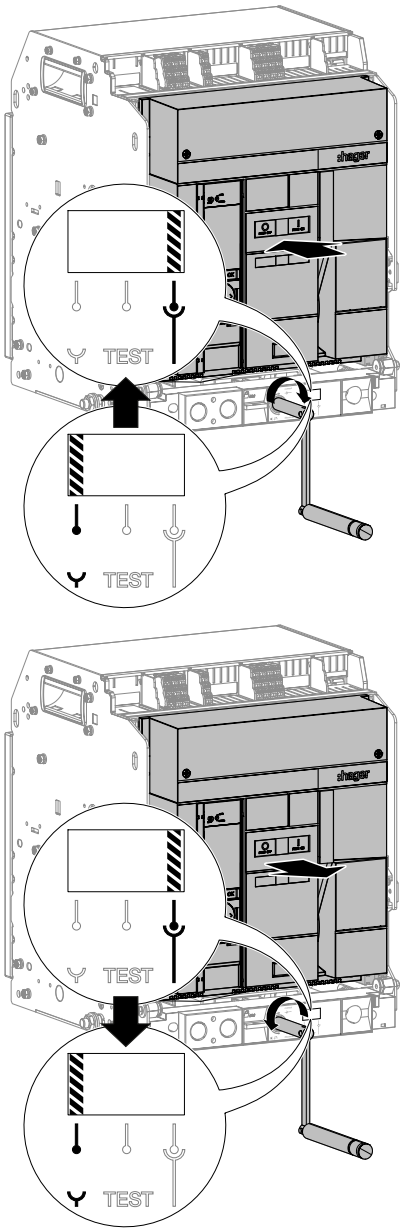
7	Check that each circuit breaker fits only into the appropriate chassis.	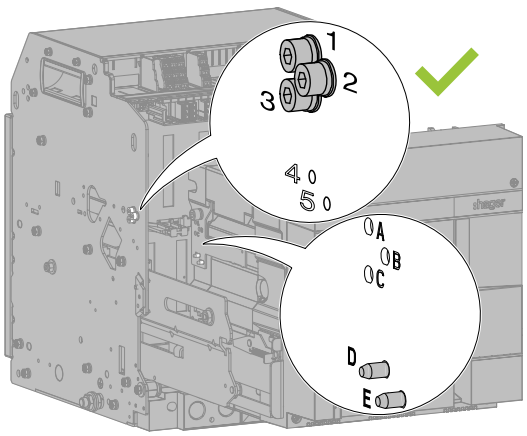

	Action	Illustration
	(continued)	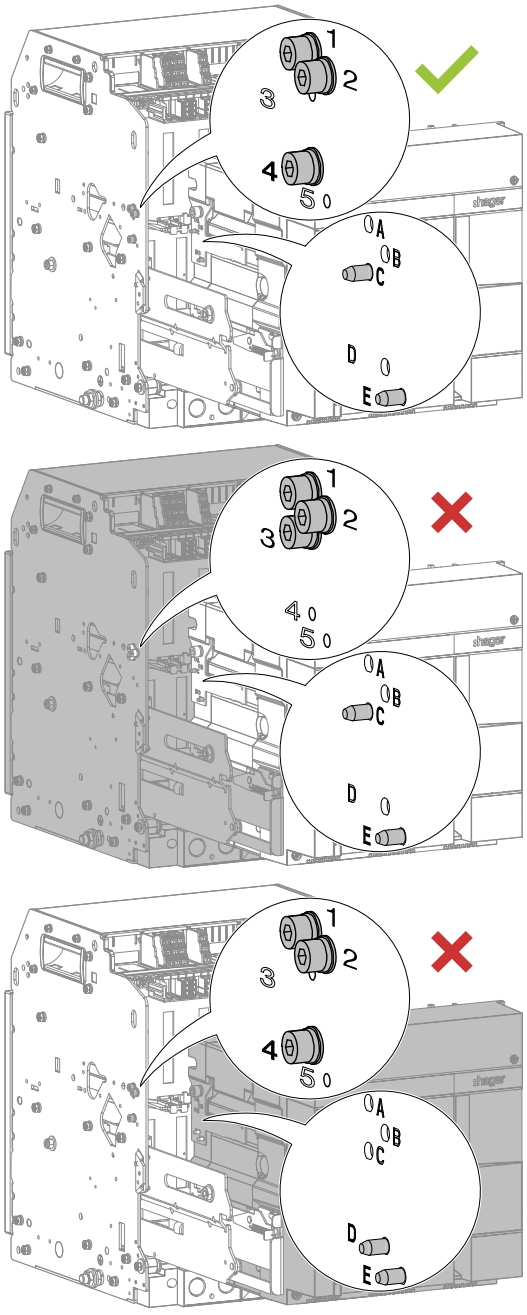

6.29 DF door flange

For the installation of a DF door flange

Follow the installation instructions described in manual 6LE007882A (HW2) or 6LE009126A (HW4), which are provided with the product, then proceed to instructions 7 to 9 below.

For the replacement of a DF door flange

Follow the instructions below:

	Action	Illustration
1	Open the door of the electrical cabinet, then unscrew the screw of the 12 retaining clamps.	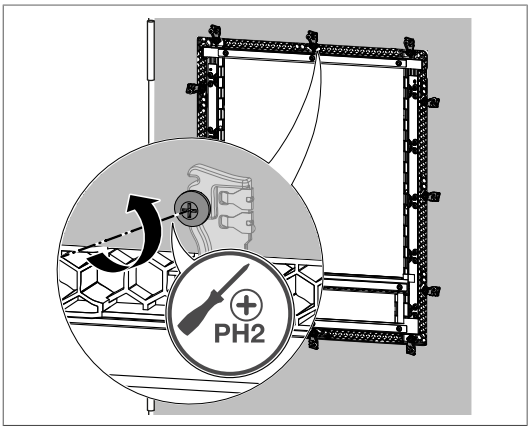
2	Rotate each DF door flange retaining clamp inwards.	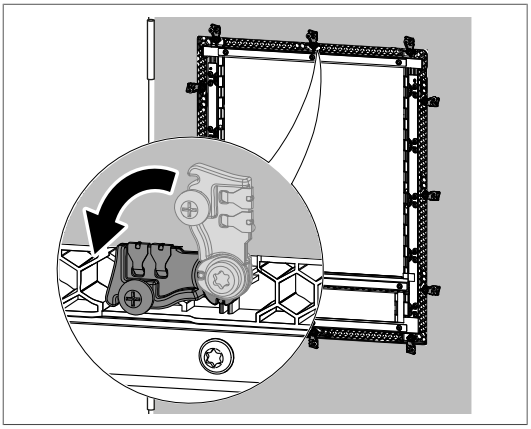
3	Remove the DF door flange.	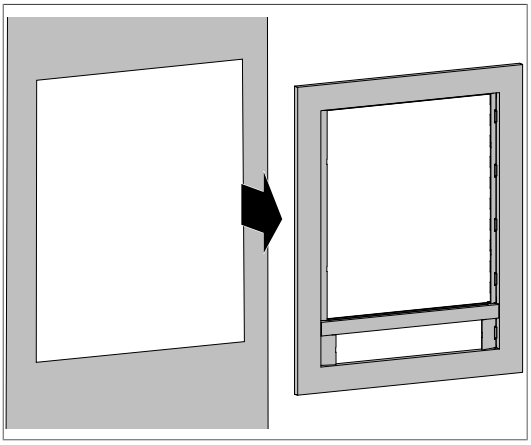

	Action	Illustration
4	Replace it with a new one.	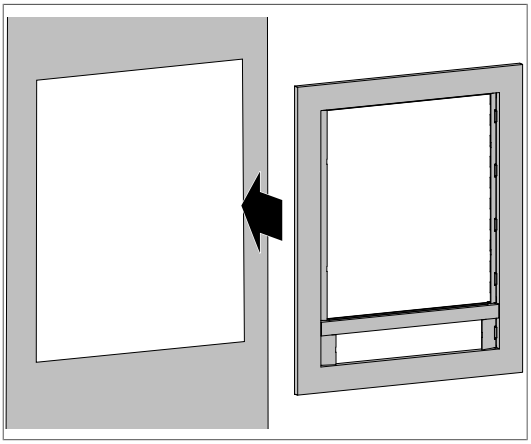
5	Rotate the 12 retaining clips outward.	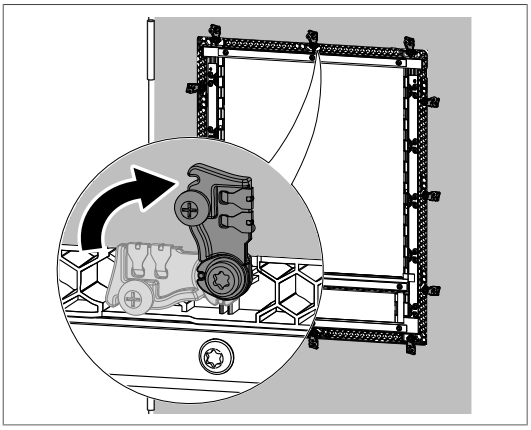
6	Tighten the screw of each retaining clamp.	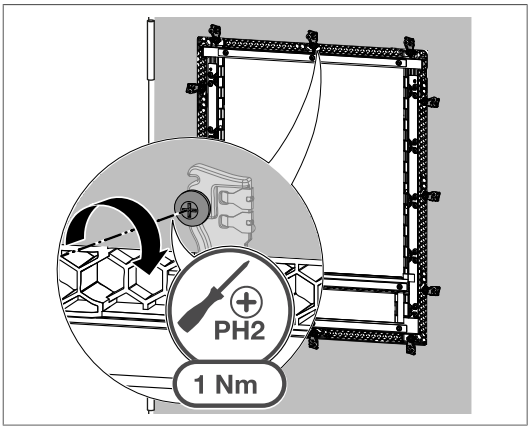

	Action	Illustration
7	With the circuit breaker in the Connected position, check that it is possible to open and close the door of the electrical cabinet. If this is not the case, adjust the position of the door flange (See 6LE007882A for HW2 or 6LE009126A for HW4).	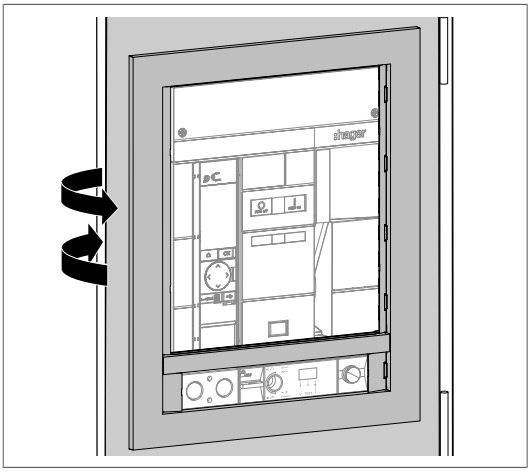
8	Put the circuit breaker in the Disconnected position.	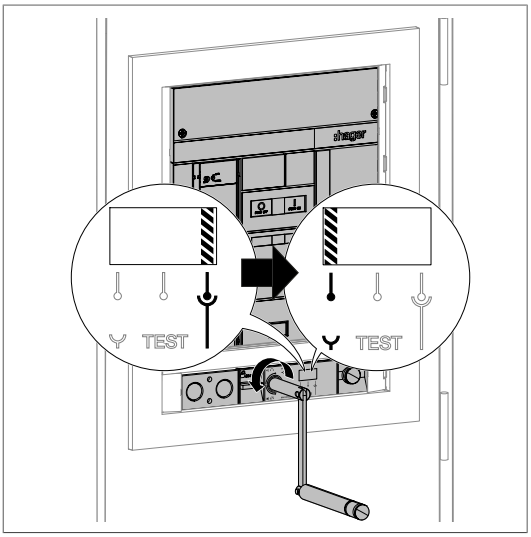
9	With the circuit breaker in the Disconnected position, check that it is possible to open and close the door.	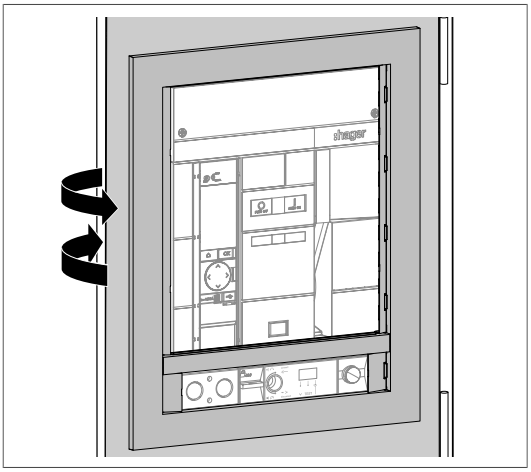

6.30 IB interphase barriers

For the installation of an IB phase separator

Follow the installation instructions described in the 6LE007870A manual provided with the product.

For the replacement of an IB phase separator

For a fixed or drawout circuit breaker, follow the instructions below:

	Action	Illustration
1	Remove the IB phase separator that is to be replaced.	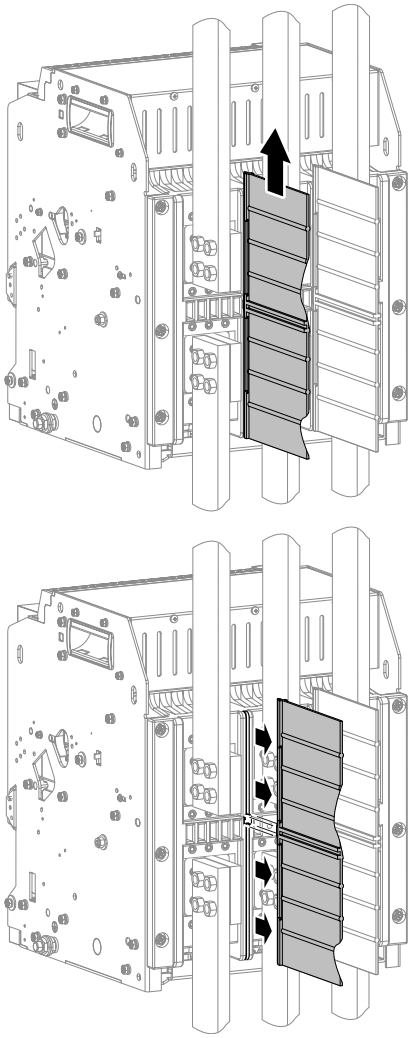

	Action	Illustration
2	Position the new IB phase separator in its slot.	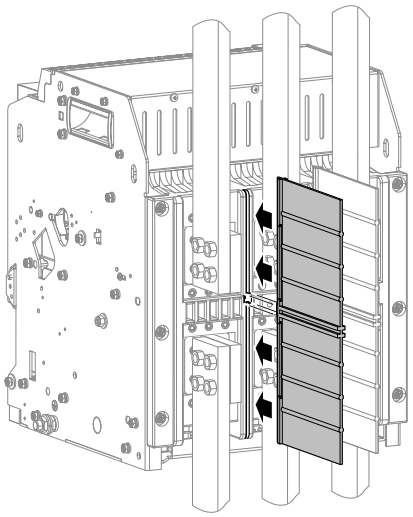
3	Then push it down.	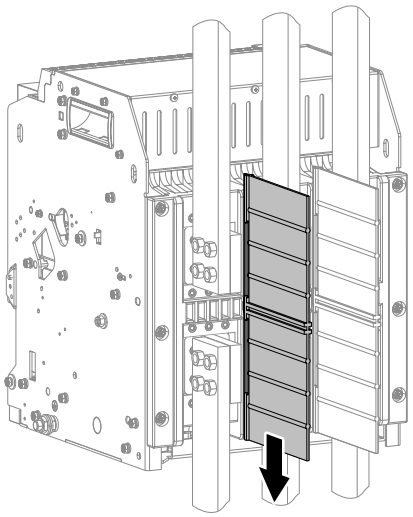

6.31 Communication module

For the installation of a communication module

Follow the installation instructions described in manual 6LE009015A, which is supplied with the product, then install a TB connection terminal block as described in manual 6LE009031A.
Then proceed to instructions 8 to 10 for a drawout circuit breaker and 11 to 14 for a fixed circuit breaker.

For the replacement of a TB connection terminal block on a drawout circuit breaker

Remove the circuit breaker from its chassis first (see Chapter 6.1, Removal of the drawout circuit breaker instructions 1 to 6) then follow the instructions below:

	Action	Illustration
1	If necessary, unclip the protection cover from the terminal block.	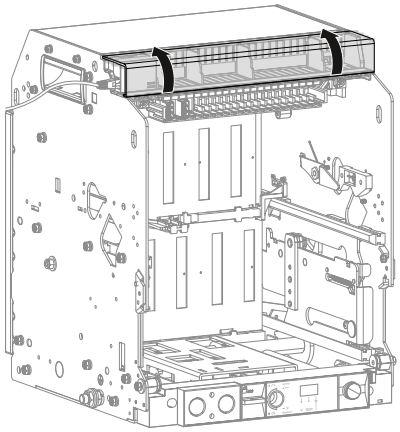
2	Disconnect the network cable(s) of the communication module.	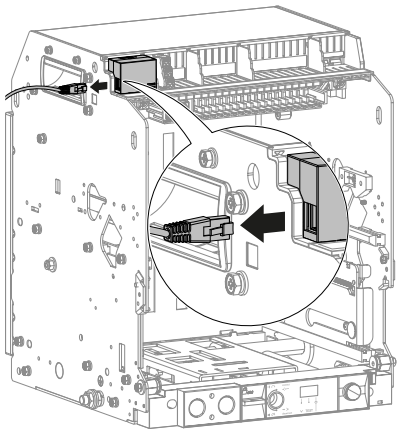
3	Unscrew the 2 screws a quarter of a turn, then remove the terminal strip.	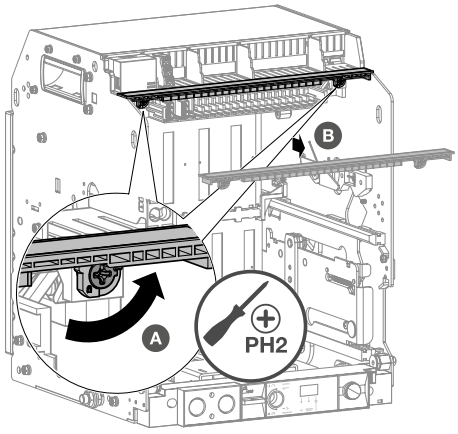

	Action	Illustration
4	Press the rear part while pulling on the communication module to remove it.	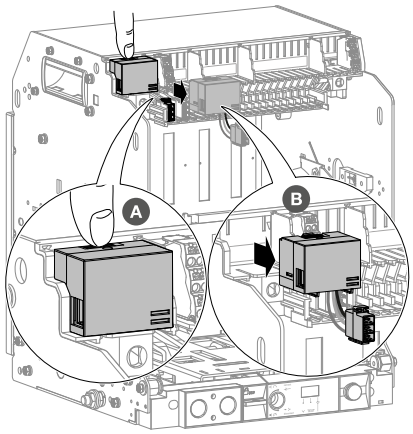
5	Correctly position the wiring of the new communication module.	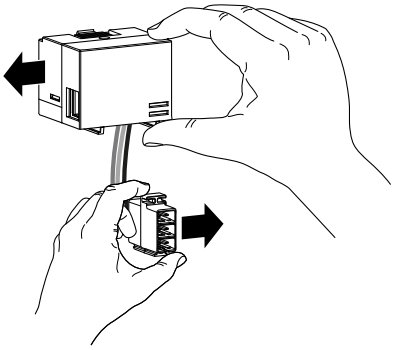
6	Clip it into its housing.	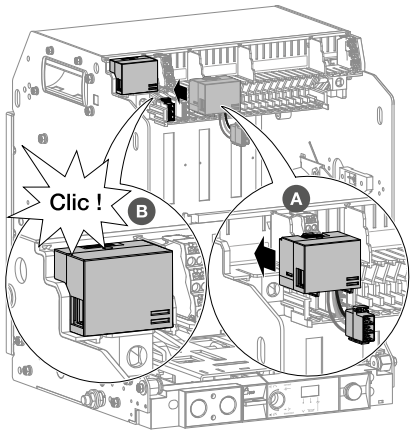
7	Refit the terminal strip, then tighten the 2 screws a quarter of a turn.	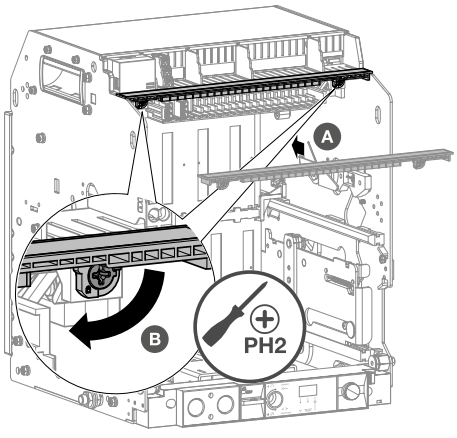

	Action	Illustration
8	Proceed to insert the circuit breaker into its chassis and move it to the Connected position (see Chapter see Chapter 6.3, Put back in place the drawout circuit breaker Instructions 7 to 17). Check that the lights on the front panel of the communication module are ON. **POWER** Permanent green — Product operational Permanent red — Product faulty **COM** Flashing yellow — Modbus communication Off — No Modbus traffic Flashing red — Verify the Modbus setting	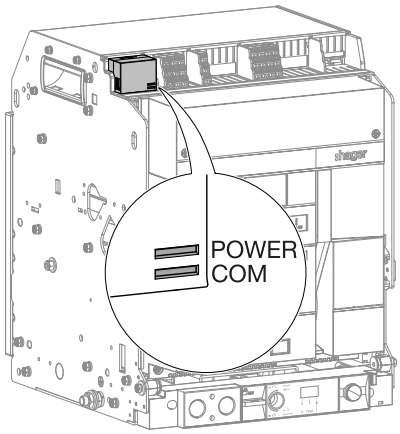
9	Reconnect the network cable(s) of the communication module.	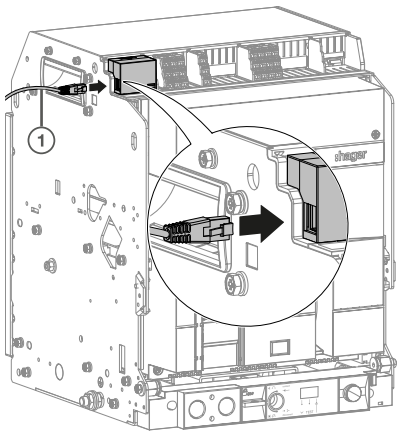 Fig. 17: HWY966H Modbus TCP 1 RJ45 (1) Client Modbus TCP

	Action	Illustration
9	(continued)	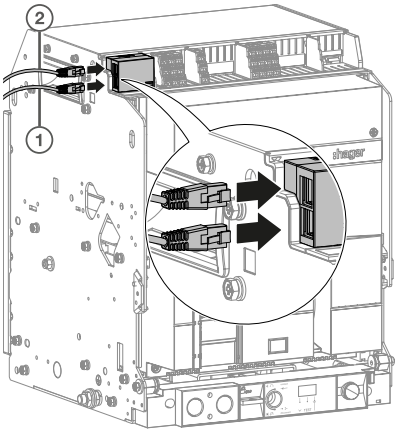 Fig. 18: HWY965H Modbus RTU 2 RJ45 ① Next 'slave' circuit breaker or terminal resistor 120 Ω HT-G467H ② Modbus Master
10	If necessary, put the protection cover back on the terminal block.	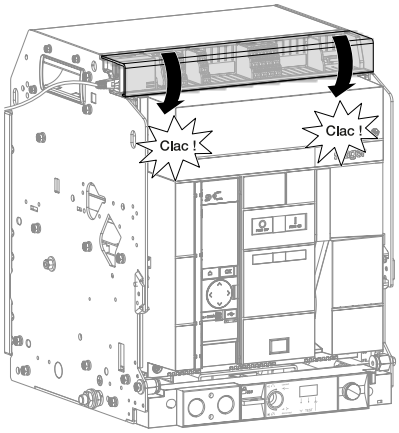

For the replacement of a communication module on a fixed circuit breaker

Follow the instructions below:

	Action	Illustration
1	If necessary, unclip the protection cover from the terminal block.	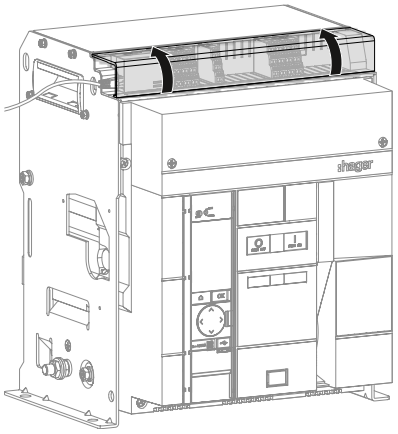
2	Disconnect the network cable(s) of the communication module.	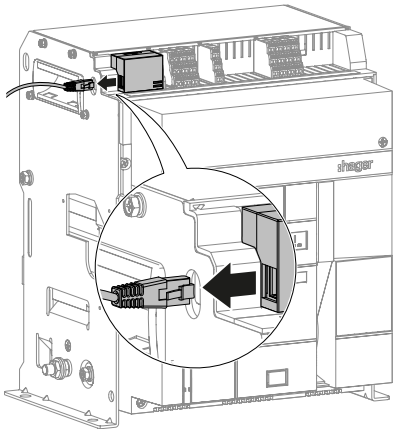
3	Remove the top cover.	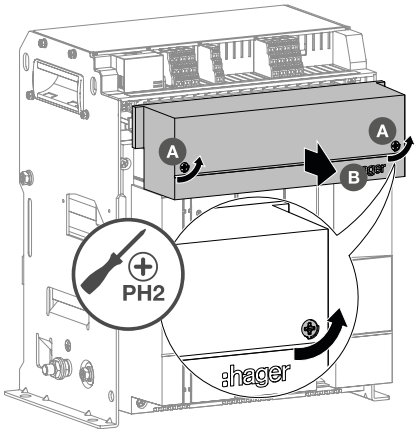

	Action	Illustration
4	Unscrew the 2 screws by a quarter of a turn, then remove the lower terminal strip.	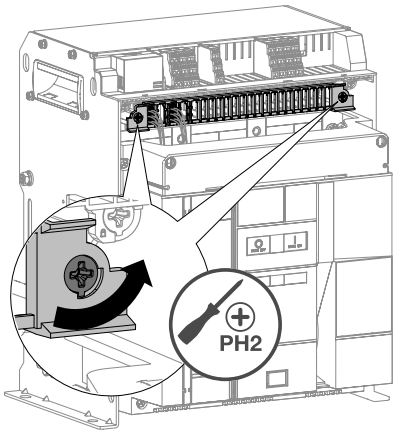 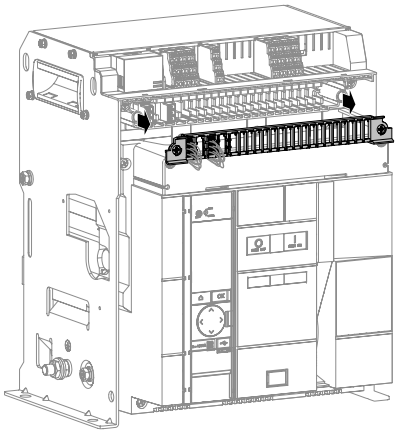
5	Unscrew the 2 screws a quarter of a turn, then remove the terminal strip.	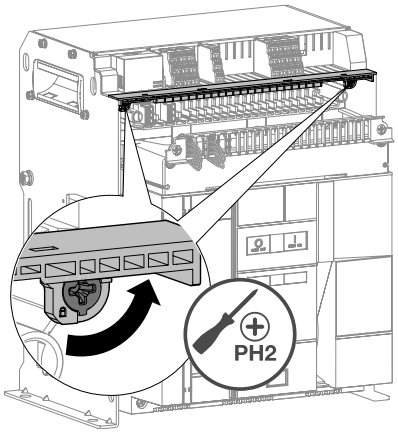

	Action	Illustration
5	(continued)	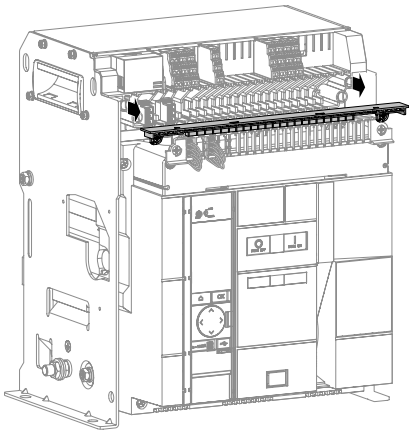
6	Press the rear part while pulling on the communication module to remove it.	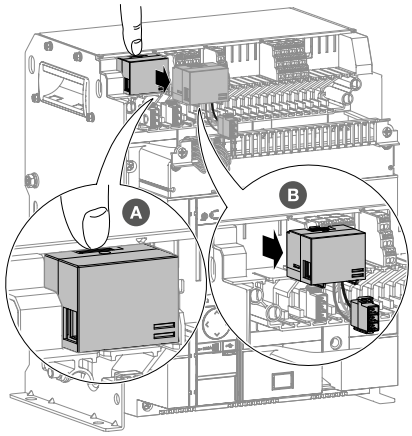
7	Correctly position the wiring of the new communication module.	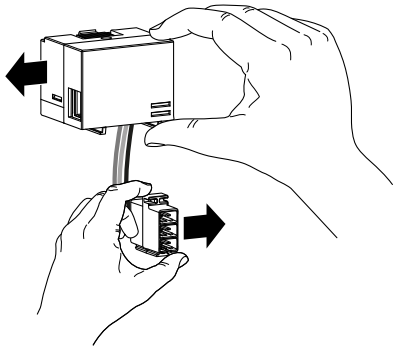
8	Clip it into its housing.	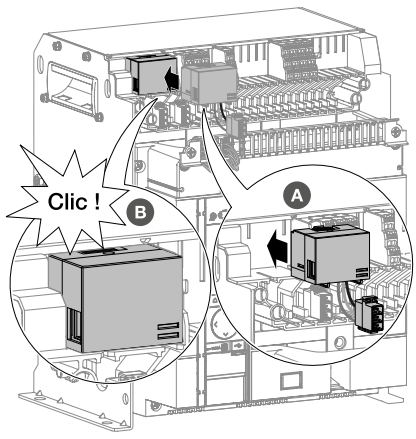

	Action	Illustration
9	Refit the terminal strip, then tighten the 2 screws a quarter of a turn.	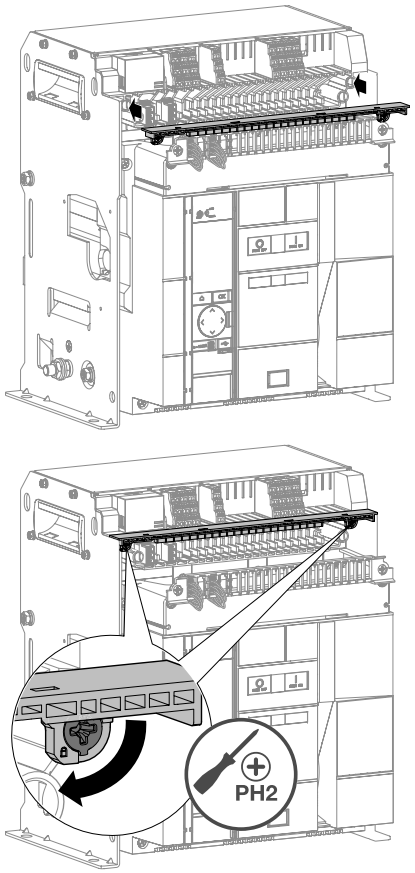
10	Put back the lower terminal strip then turn the 2 screws by a quarter of a turn.	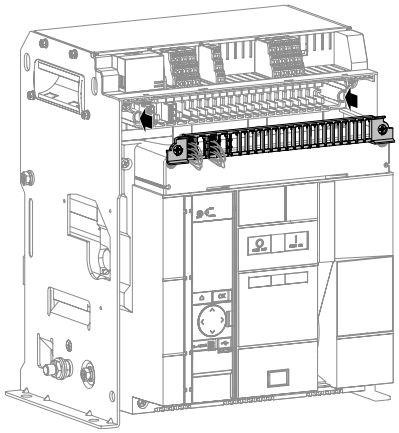

<table>
<tr><th></th><th>Action</th><th>Illustration</th></tr>
<tr><td>10</td><td>(continued)</td><td> 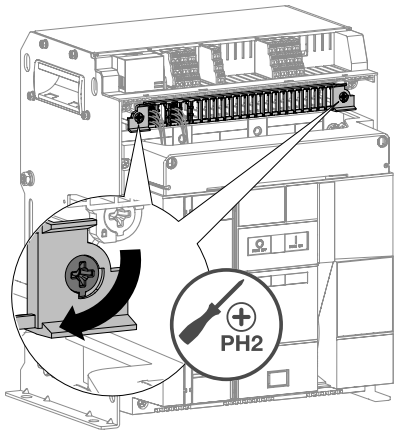
</td></tr>
<tr><td>11</td><td>Check that the lights on the front panel of the communication module are lit.
POWER
<table>
<tr><td>Permanent green</td><td>Product operational</td></tr>
<tr><td>Permanent red</td><td>Product faulty</td></tr>
</table>
COM
<table>
<tr><td>Flashing yellow</td><td>Modbus communication</td></tr>
<tr><td>Off</td><td>No Modbus traffic</td></tr>
<tr><td>Flashing red</td><td>Verify the Modbus setting</td></tr>
</table></td><td> 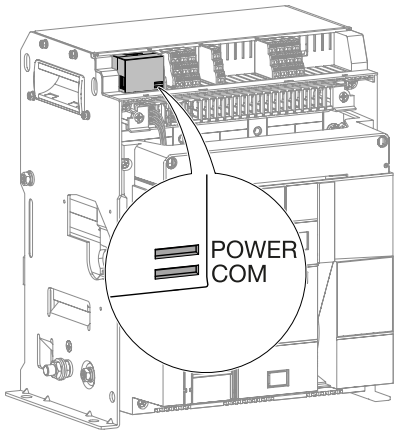
</td></tr>
<tr><td>12</td><td>Put the top cover back on.</td><td> 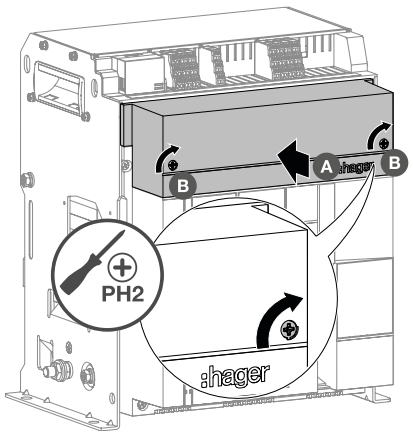
</td></tr>
</table>

	Action	Illustration
13	Reconnect the network cable(s) of the communication module.	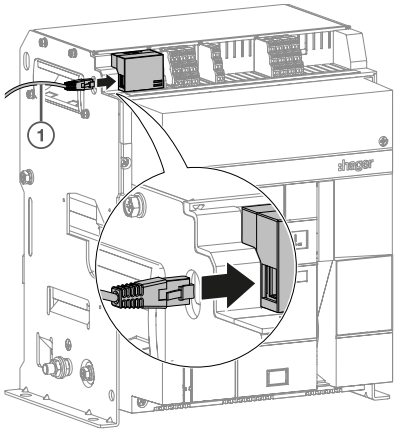 Fig. 19: HWY966H Modbus TCP 1 RJ45 (1) Client Modbus TCP 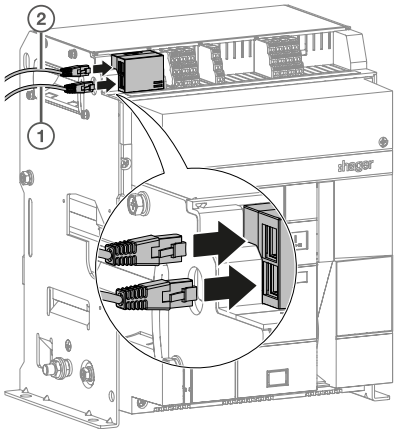 Fig. 20: HWY965H Modbus RTU 2 RJ45 (1) Modbus Master (2) Next 'slave' circuit breaker or terminal resistor 120 Ω HT-G467H
14	If necessary, put the protection cover back on the terminal block.	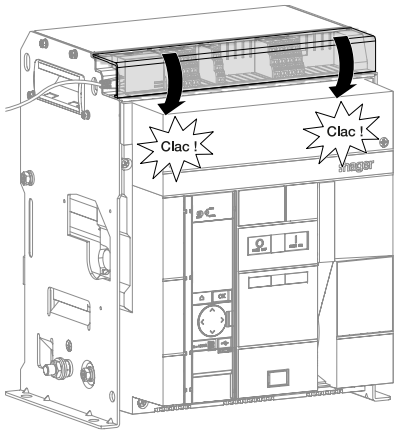

6.32 INS insulation module

For the installation of an INS insulation module

Follow the installation instructions described in the 6LE008004A manual provided with the product. Then proceed to instructions 11 to 12 below.

For the replacement of an INS insulation module

Remove the circuit breaker first (see Chapter 6.1, Removal of the drawout circuit breaker or see Chapter 6.4, Disassembling the fixed circuit breaker) then follow the instructions below:

	Action	Illustration
1	Remove the INS insulation module connector on the sentinel Energy trip unit.	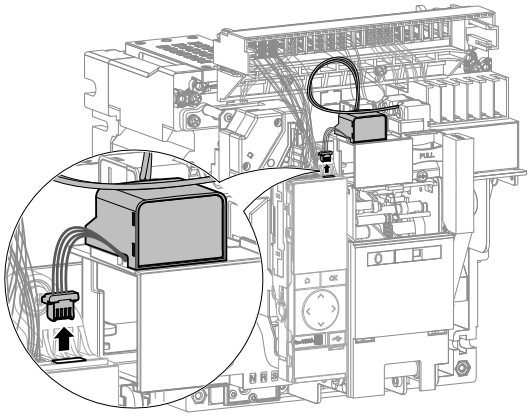
2	Remove all the cables connected to the INS insulation module.	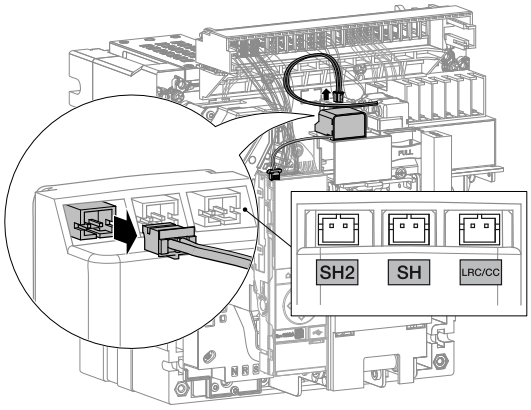
3	Remove the INS insulation module.	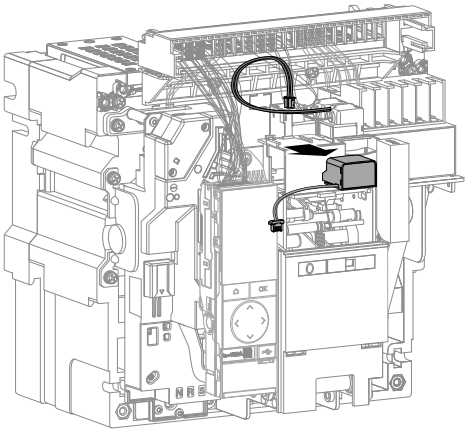

	Action	Illustration
4	Remove this cable from the coil, and replace it with a new one provided with the new INS insulation module.	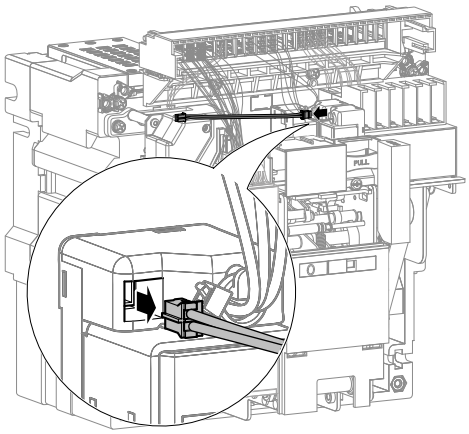
5	Install a new INS insulation module.	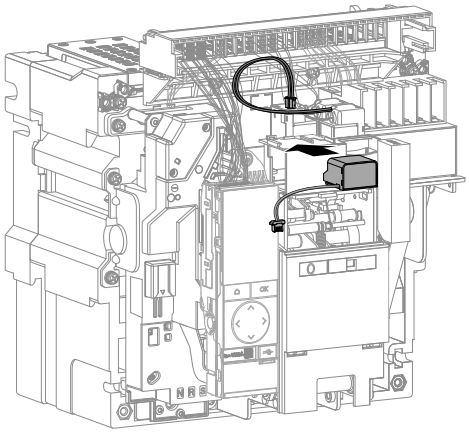
6	Connect all the cables to the INS insulation module.	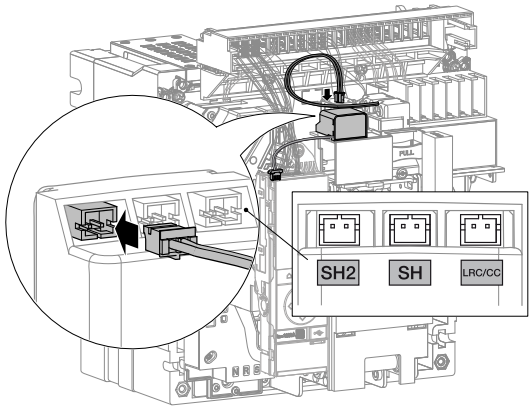
7	Connect the INS insulation module connector to the sentinel Energy trip unit.	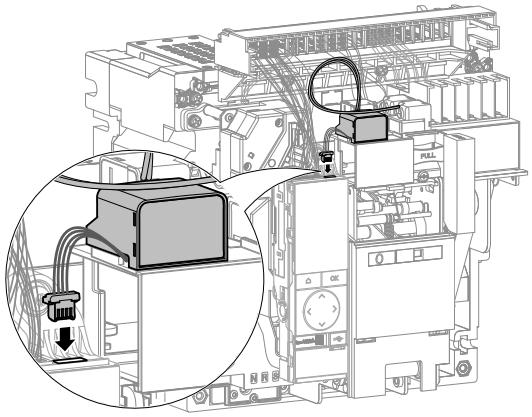

	Action	Illustration
8	Put the circuit breaker back (see Chapter 6.3, Put back in place the drawout circuit breaker instructions 1 to 17, or see Chapter 6.6, Re-assembling the fixed circuit breaker instructions 1 to 10). At this stage, the circuit breaker is open.	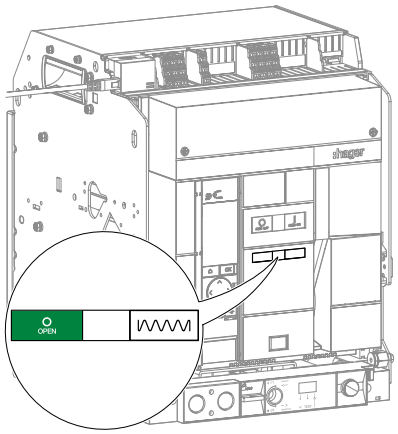
9	Open the transparent cover then connect a PC that is equipped with the software **Hager Power setup** to the USB-C socket of the trip unit.	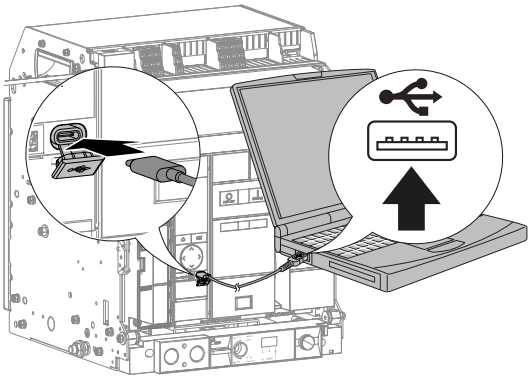
10	• Go to the Remote control menu in the **Hager Power setup** software then open and/or close the circuit breaker according to the presence of the SH coil and/or the CC coil. Note that the coils must be powered by the UV/SH2, SH/UV2 and/or CC coils. • Remove the PC from the USB-C socket of the trip unit and close the transparent cover.	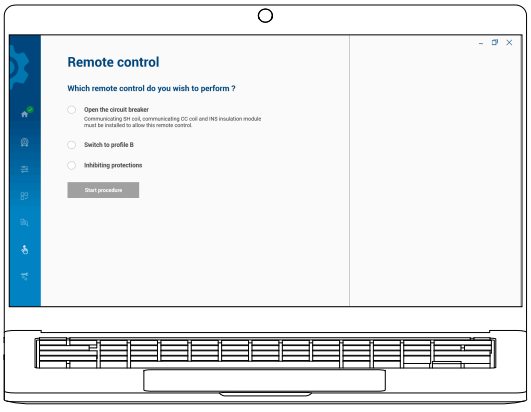

6.33 Panel display

For the installation of a panel display

Follow the installation instructions in the user manual 6LE005548A.

For the replacement of a panel display

Follow the instructions below:

	Action	Illustration
1	Remove the HWY210H connector connecting the hw+ circuit breaker and the power supply to the back of the panel display.	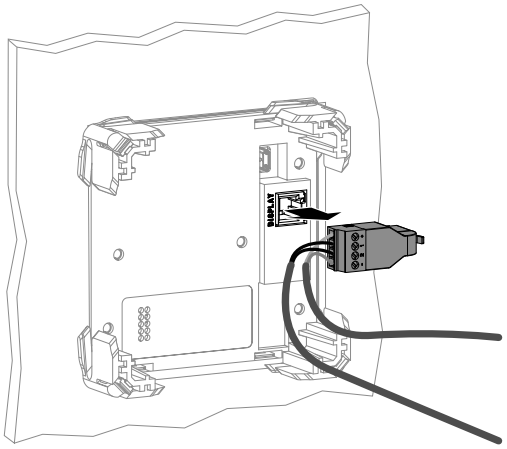
2	2 Remove the four mounting clips…	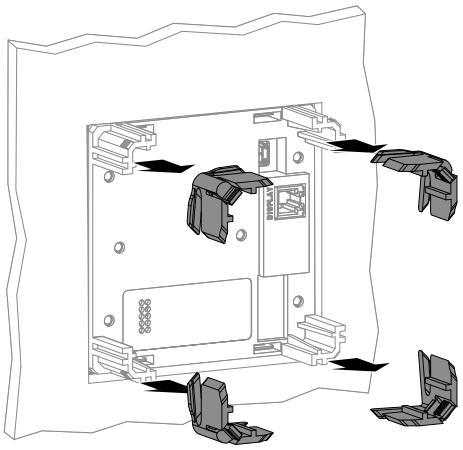
	…then the remote display from its support. Replace it with a new one and put on the four new clips.	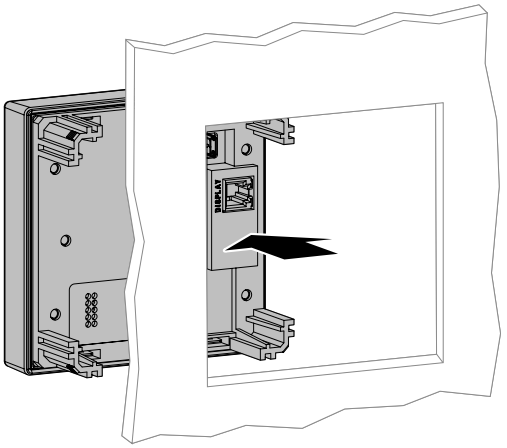

	Action	Illustration
3	Reconnect the HWY210H connector to the panel display.	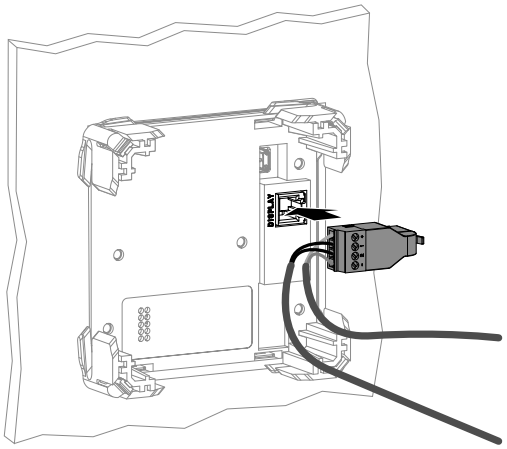
4	Verify that the green indicator lights up, signalling that the panel display is powered and ready for operation.	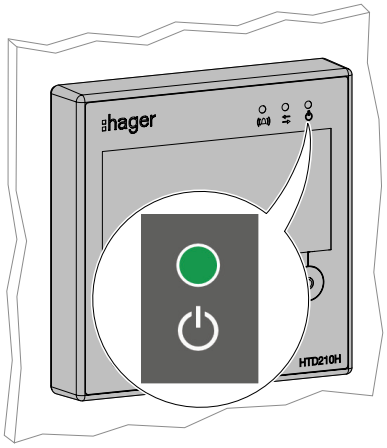
5	Check that there are no communication error messages on the display.	

WHAT TO DO

If a communication error message is shown on the display, check the cabling on the HWY210H connector, and if necessary, replace it.

6.34 Front cover

For the replacement of a front cover on a fixed circuit breaker

Proceed to disassemble the cover (see Chapter 6.4, Disassembling the fixed circuit breaker), then to its replacement and reassembly (see Chapter 6.6, Reassembling the fixed circuit breaker , Instructions 1 to 3).

For the replacement of a front cover on a drawout circuit breaker

Follow the instructions below:

	Action	Illustration
1	If the circuit breaker is closed, and the spring is discharged or charged.	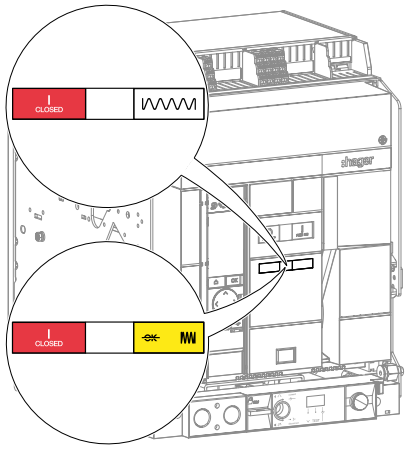
	Open the circuit breaker by pressing the opening push button .	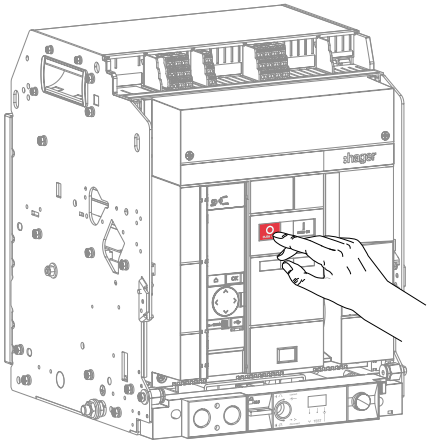
2	check that the indicators change status.	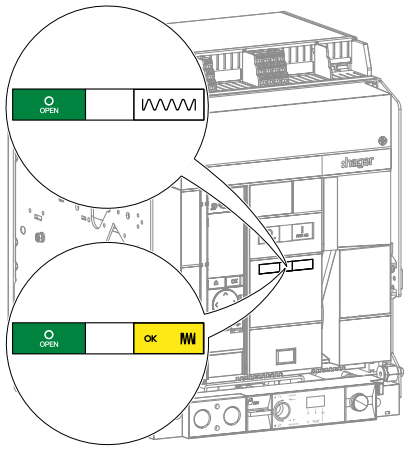

	Action	Illustration
3	A drawout circuit breaker should be placed in the Disconnected position.	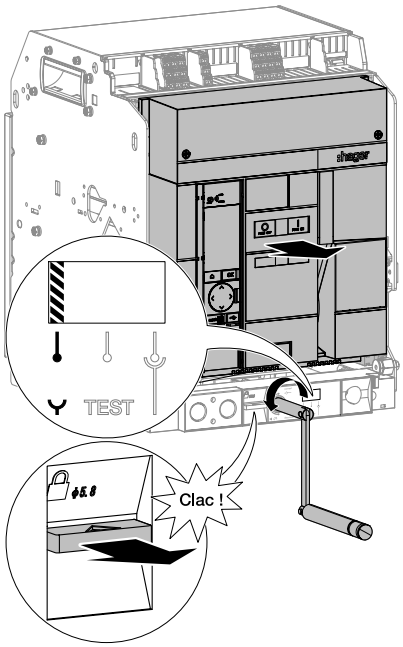
4	If necessary, remove the seal from the transparent cover, which protects access to the trip unit, then unscrew the 4 screws.	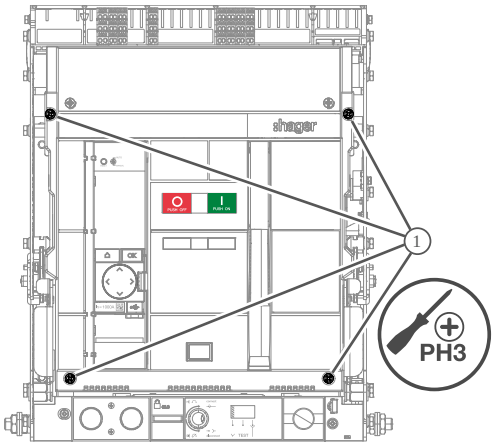
5	Lower the charging handle.	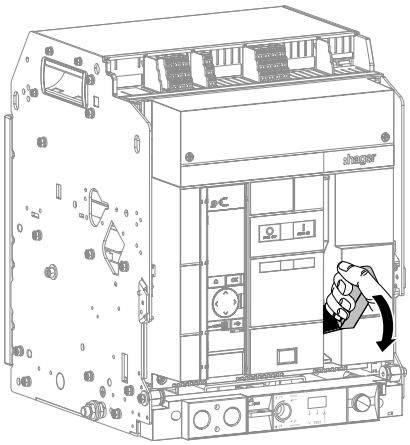

	Action	Illustration
6	Remove the damaged front cover.	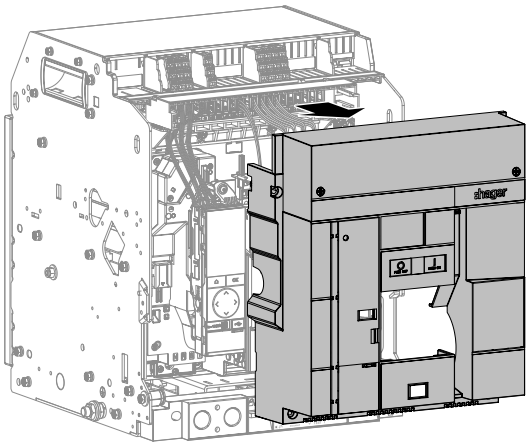
7	Lower the charging handle.	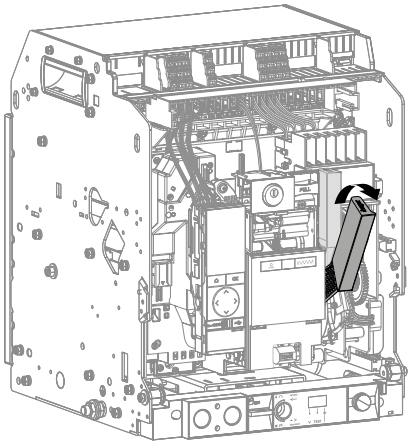
8	Replace the damaged front cover with a new one.	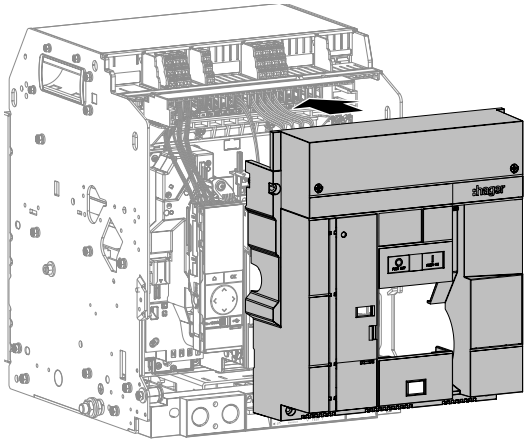

	Action	Illustration
9	Retighten the 4 screws.	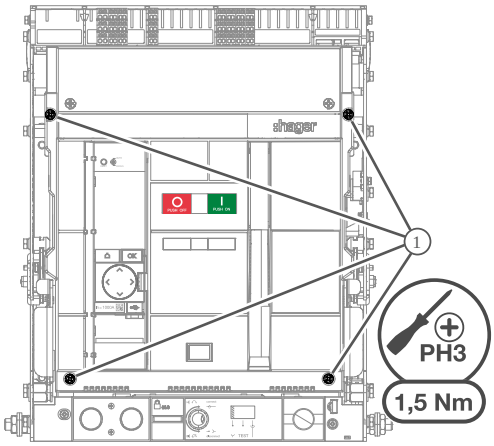
10	The drawout circuit breaker should be placed in the Connected position.	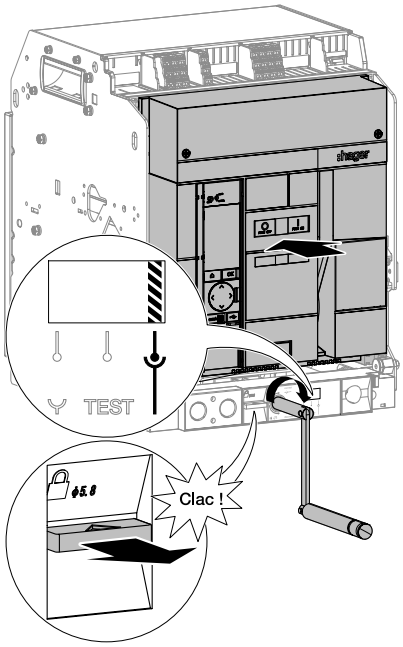
11	Charge the closing spring using the charging handle until the following indicators appear.	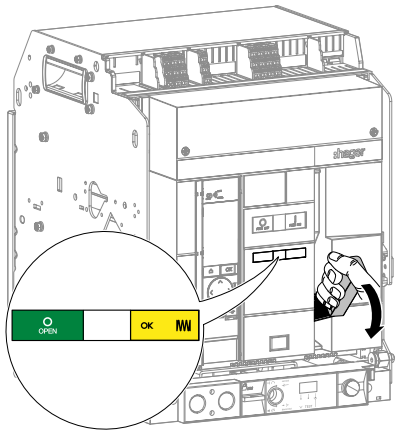

	Action	Illustration
12	Close the circuit breaker by pressing the closing push button  .	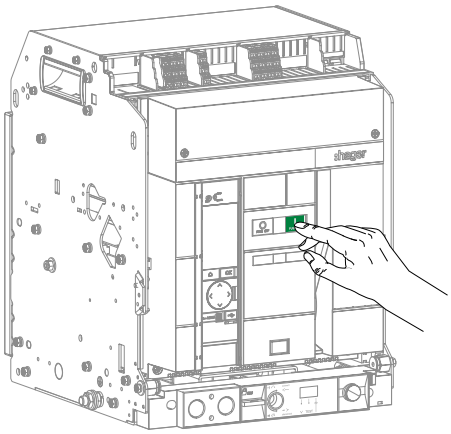
13	Check that the indicators change status.	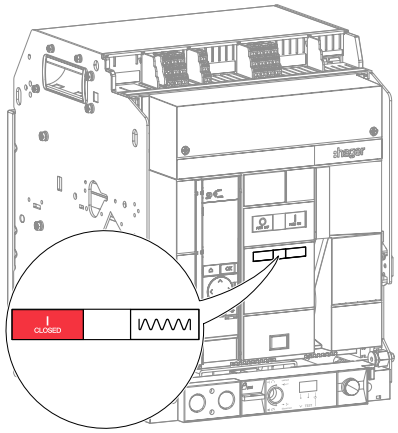
14	If necessary, fix a seal on the transparent cover protecting access to the trip unit.	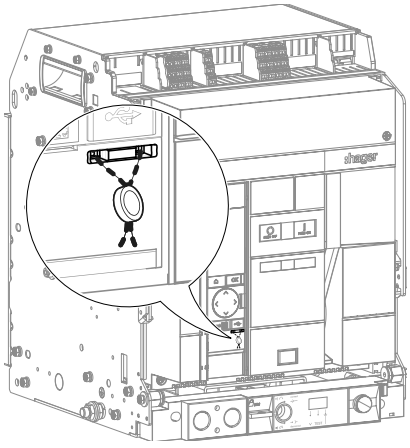

Warning

Risk of unexpected operation.

Before closing the transparent cover, recheck the protection settings (see Sentinel electronic trip unit 6LE009420A or Sentinel Energy electronic trip unit User Guide 6LE009417A).

7 Optional accessories

For the replacement of accessories and auxiliaries, order the following reference items:

Reference	Description
HWW465HSA [1]	Rating plug 630A
HWW466HSA [1]	Rating plug 800A
HWW467HSA	Rating plug 1000A
HWW468HSA	Rating plug 1250A
HWW469HSA	Rating plug 1600A
HWW470HSA	Rating plug 2000A
HWW471HSA	Rating plug 2500A
HWW472HSA [2]	Rating plug 3200A
HWW473HSA [2]	Rating plug 4000A
HWW665HSA [1]	Rating plug 630A Meter Plus
HWW666HSA [1]	Rating plug 800A Meter Plus
HWW667HSA	Rating plug 1000A Meter Plus
HWW668HSA	Rating plug 1250A Meter Plus
HWW669HSA	Rating plug 1600A Meter Plus
HWW670HSA	Rating plug 2000A Meter Plus
HWW671HSA	Rating plug 2500A Meter Plus
HWW672HSA [2]	Rating plug 3200A Meter Plus
HWW673HSA [2]	Rating plug 4000A Meter Plus
HWW685HSA [1]	Rating plug 630A Harmonic
HWW686HSA [1]	Rating plug 800A Harmonic
HWW687HSA	Rating plug 1000A Harmonic
HWW688HSA	Rating plug 1250A Harmonic
HWW689HSA	Rating plug 1600A Harmonic
HWW690HSA	Rating plug 2000A Harmonic
HWW691HSA	Rating plug 2500A Harmonic
HWW692HSA [2]	Rating plug 3200A Harmonic
HWW693HSA [2]	Rating plug 4000A Harmonic

[1] Only for HW2

[2] Only for HW4

Optional accessories

Reference	Description
HWW705HSA [1]	Rating plug 630A Advanced
HWW706HSA [1]	Rating plug 800A Advanced
HWW707HSA	Rating plug 1000A Advanced
HWW708HSA	Rating plug 1250A Advanced
HWW709HSA	Rating plug 1600A Advanced
HWW710HSA	Rating plug 2000A Advanced
HWW711HSA	Rating plug 2500A Advanced
HWW712HSA [2]	Rating plug 3200A Advanced
HWW713HSA [2]	Rating plug 4000A Advanced
HWW725HSA [1]	Rating plug 630A Ultimate
HWW726HSA [1]	Rating plug 800A Ultimate
HWW727HSA	Rating plug 1000A Ultimate
HWW728HSA	Rating plug 1250A Ultimate
HWW729HSA	Rating plug 1600A Ultimate
HWW730HSA	Rating plug 2000A Ultimate
HWW731HSA	Rating plug 2500A Ultimate
HWW732HSA [2]	Rating plug 3200A Ultimate
HWW733HSA [2]	Rating plug 4000A Ultimate
HWW463HSA	Trip unit battery
HWW461HSA	Trip unit screen
HWX090HSA	OAC Output Alarm Contact module
HWX042HSA	Auxiliary contact (AX)
HWX043HSA	Low level auxiliary contact (AX)
HWX048HSA	Fault trip contact (FS)
HWX020HSA	Shunt trip coil 24-30V AC/DC (SH)
HWX021HSA	Shunt trip coil 48-60V AC/DC (SH)
HWX022HSA	Shunt trip coil 100-130V AC/DC (SH)
HWX023HSA	Shunt trip coil 200-250V AC/DC (SH)
HWX024HSA	Shunt trip coil 380-480V AC (SH)

[1] Only for HW2

[2] Only for HW4

Reference	Description
HWX030HSA	Undervoltage release coil 24-30V AC/DC (UV)
HWX031HSA	Undervoltage release coil 48-60V AC/DC (UV)
HWX032HSA	Undervoltage release coil 100-130V AC/DC (UV)
HWX033HSA	Undervoltage release coil 200-250V AC/DC (UV)
HWX034HSA	UV undervoltage release coil 380-480V AC (UV)
HWY030HSA	Time delay for undervoltage release coil UVTC 24-30V AC/DC
HWY031HSA	Time delay for undervoltage release coil UVTC 48-60V AC/DC
HWX033HSA	Time delay for undervoltage coil UVTC 200-250V AC
HWX034HSA	Time delay for undervoltage coil UVTC 380-480V AC
HWX025HSA	Closing coil 24-30V AC/DC (CC)
HWX026HSA	Closing coil 48-60V AC/DC (CC)
HWX027HSA	Closing coil 100-130V AC/DC (CC)
HWX028HSA	Closing coil 200-250V AC/DC (CC)
HWX029HSA	Closing coil 380-480V AC (CC)
HWX011HSA	Motor 24V AC 50/60Hz HW2/HW4 (MO)
HWX012HSA	Motor 48-60V AC 50/60Hz HW2/HW4 (MO)
HWX013HSA	Motor 100-130V AC 50/60Hz HW2/HW4 (MO)
HWX014HSA	Motor 200-250V AC 50/60Hz HW2/HW4 (MO)
HWX015HSA	Motor 380-400V AC 50/60Hz HW2/HW4 (MO)
HWX016HSA	Motor 415-450V AC 50/60Hz HW2/HW4 (MO)
HWX711HSA	Motor 24V DC HW2/HW4 (MO)
HWX712HSA	Motor 48-60V DC HW2/HW4 (MO)
HWX713HSA	Motor 100-130V DC HW2/HW4 (MO)
HWX714HSA	Motor 200-250V DC HW2/HW4 (MO)
HWX092HSA	RTC Ready-to-Close contact
HWY971H	Neutral sensor HW2 (ENCT)
HWY972H	Neutral sensor HW4 (ENCT)
HWY980H	Cable adapter for external neutral sensor hw+
HWX071HSA	ON/OFF Cycle Counter (CYC)
HWX050HSA	Position contact (PS)
HWX051HSA	Low level position contacts (PS)

Reference	Description
HWY701	Cam lock RO Type 1 - K1L1/L4
HWY702	Cam lock RO Type 2 - K2L2/L4/L5
HWY703	Cam lock RO Type 3 - K3L3/L5
HWY704	Cam lock RO Type 4 - K4L4
HWY705	Cam lock RO Type 5 - K5L5
HWY360H	No OFF locking button
HWY090HSA	Push button cover HW2/HW4 (PBC)
HWY097HSA	Control terminal block cover HW2 Fixed 3/4 P (TC)
HWY098HSA	Control terminal block cover HW2 Drawout 3/4 P (TC)
HWY099HSA	Control terminal block cover HW4 Fixed 3/4 P (TC)
HWY100HSA	Control terminal block cover HW4 Drawout 3/4 P (TC)
HWY239H	Open door racking interlock accessory HW2/HW4 (RI)
HWY261HSA	Accessory for locking the circuit breaker in OFF by key lock HW2/HW4 (OLK)
HWY265HSA	Accessory for locking the circuit breaker in OFF by padlock HW2/HW4 (OLK)
HW2C3SH	Chassis HW2 3-pole (CHA)
HW2C4SH	Chassis HW2 4-pole (CHA)
HW4C3PH	Chassis HW4 3-pole (CHA)
HW4C4PH	Chassis HW4 4-pole (CHA)
HWY271HSA	Accessory for locking the circuit breaker position in its chassis HW2/HW4 (CL)
HWY277H	Wrong insertion preventer for drawout circuit breaker HW2/HW4 (WIP)
HWY284H	Door flange HW2 fixed thin (Quadro system) (DF)
HWY286H	Door flange HW2 fixed thick (univers N and unimes H systems) (DF)
HWY285H	Door flange HW2 drawout thin (Quadro system) (DF)
HWY287H	Door flange HW2 drawout thick (univers N and unimes H systems) (DF)
HWY288H	Door flange HW4 fixed thin (Quadro system) (DF)
HWY290H	Door flange HW4 fixed thick (univers N and unimes H systems) (DF)
HWY289H	Door flange HW4 drawout thin (Quadro system) (DF)
HWY291H	Door flange HW4 drawout thick (univers N and unimes H systems) (DF)
HWY950HSA	TB connection terminal block type A 6/3 TB
HWY951HSA	TB connection terminal block type B 6/6 TB
HWY952HSA	TB connection terminal block type C 2 x 6/3 TB

Reference	Description
HWY246HSA	Interphase barriers HW2/HW4 fixed 3-pole (IB)
HWY247HSA	Interphase barriers HW2/HW4 fixed 4-pole (IB)
HWY248HSA	Interphase barriers HW2/HW4 drawout 3-pole (IB)
HWY249HSA	Interphase barriers HW2/HW4 drawout 4-pole (IB)
HWY160HSA	HW2 vertical / horizontal rear sockets 3-pin 630-2500A (RC)
HWY161HSA	HW2 vertical / horizontal rear sockets 4-pin 630-2500A (RC)
HWY068HSA	HW4 vertical / horizontal rear sockets 3-pin 1000-2500A (RC)
HWY069HSA	HW4 vertical / horizontal rear sockets 4-pin 1000-2500A (RC)
HWY168HSA	HW4 vertical / horizontal rear sockets 3-pin 3200-4000A (RC)
HWY169HSA	HW4 vertical / horizontal rear sockets 4-pin 3200-4000A (RC)
HWY162HSA	Rear vertical / horizontal sockets HW2 3 poles for unimes H cabinet (RC)
HWY163HSA	Rear vertical / horizontal sockets HW2 4 poles for unimes H cabinet (RC)
HWY965HSA	Modbus-RTU communication module
HWY966HSA	Modbus-TCP communication module
HTG480H	Modbus-RTU RJ45 - RJ45 cables 0.2 m
HTG481H	Modbus-RTU RJ45 - RJ45 cables 1 m
HTG482H	Modbus-RTU RJ45 - RJ45 cables 2 m
HTG484H	Modbus-RTU RJ45 - RJ45 cables 5 m
HTG471H	Modbus-RTU RJ45 - RJ45 cables with earth 1 m
HTG472H	Modbus-RTU RJ45 - RJ45 cables with earth 2 m
HTG474H	Modbus-RTU RJ45 - RJ45 cables with earth 5 m
HTG465H	RJ45 Modbus-RTU cables with ground - bare wires 3 m
HTG485H	Modbus cable, 25 m
HTG467H	120 Ohm RJ45 terminal resistor
HWX060HSA	Insulation module (INS)
HTD210H	Panel display
HWY210H	RJ9 adapter for panel display

8 Lifespan of sensitive parts

Element	Criterion	Service life
HW2 and HW4 circuit breakers	Maximum number of cycles with periodic preventive maintenance	12500 cycles
	Maximum number of cycles at 440 V before replacement	With a maximum rated value 8000 cycles
	Maximum number of cycles at 690 V before replacement	With a maximum rated value 6000 cycles
Electronic trip unit, electronic accessories: communication module, INS insulation module, panel display.	Maximum operating time	15 years
Coils and auxiliary contacts	Maximum number of cycles before replacement	12500 cycles

Hager Electro SAS
BP3
67215 Obernai Cedex
France

T +33 (0) 3 88 49 50 50
F +33 (0) 3 88 49 50 53
info@hager.com
hager.com

2025-09

6LE009217A