Product Datasheet
LFF3006039016

LFF3006039016

external corner halogen free for trunking LF/LFF 30x57mm traffic white

Technical Features

Dimensions

Height	30 mm
Width	57 mm

Accessories

Type of accessory	Moulded

Settings

Angle range	83 - 97

Materials

Material	Acrylonitrile-Butadiene-Styrene (ABS)
Treatment	Untreated
Colour	Traffic white
RAL code	9016

Safety

Impact resistance IK	IK07

Standards

Suitable for functional integrity according to DIN4102-12	No

Use conditions

Operating temperature	-5 - 60 °C

Equipment

With protective film	No

Suitable for

LFF 30x60

Sustainability

Halogen free	Yes
REACh-SVHC free	Yes
RoHS conform	Yes
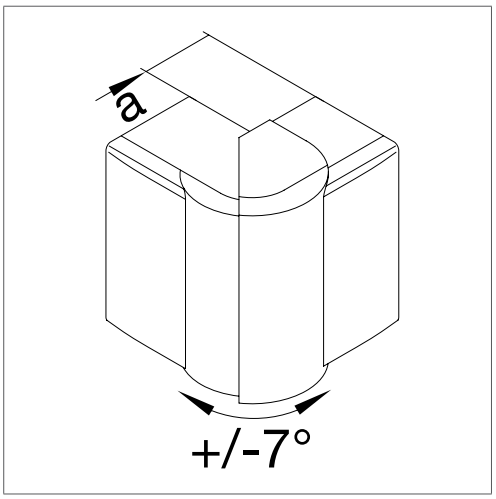
Illustrations | Drawings